Parts Catalog

Generator Drive

KTA-3067-G

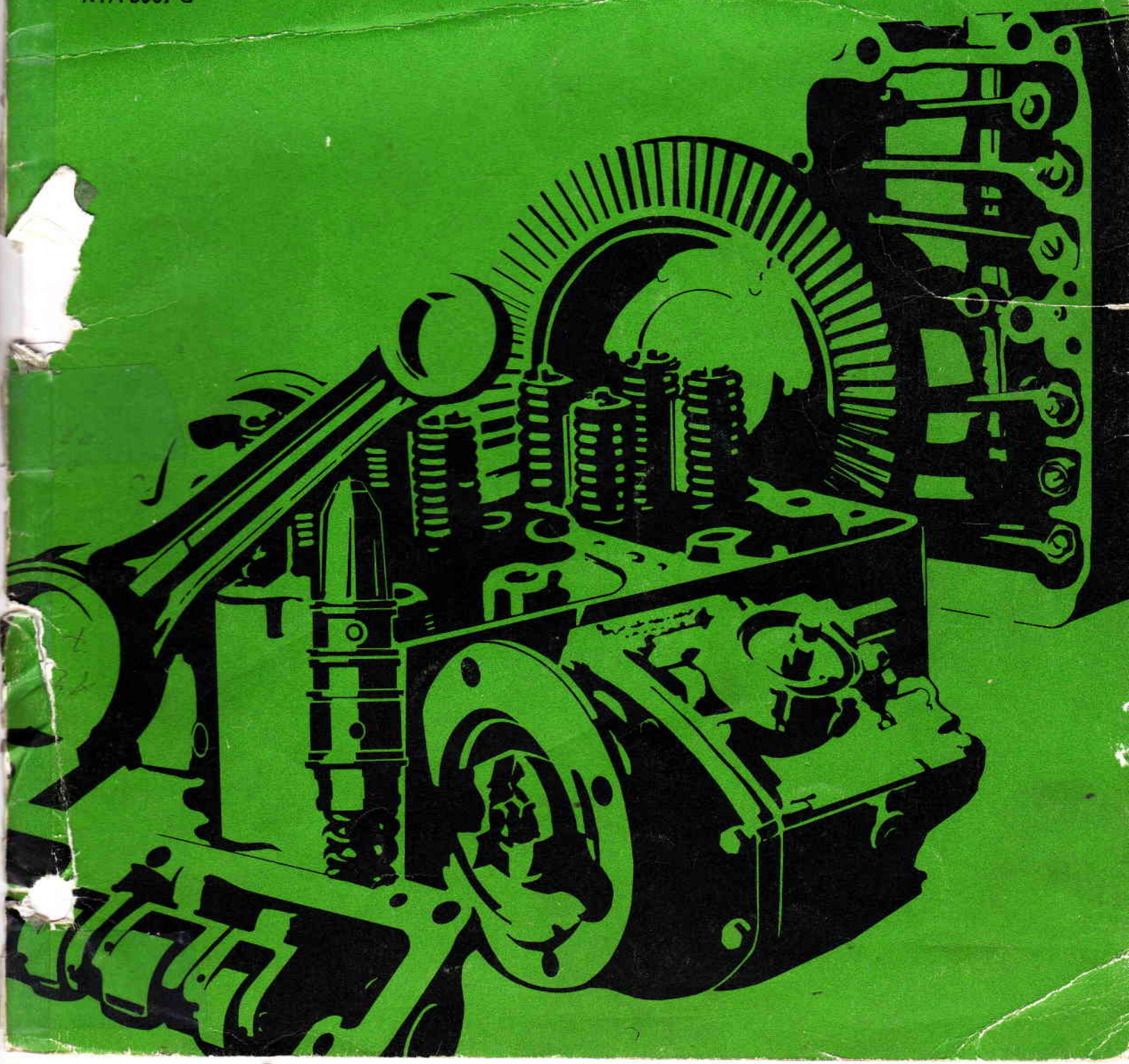

Operating control

for GP - Diesel - Generating Set 950 kVA

Main data:

- Order No. BN 8888/81
- Engine Type KTA 3067 G
- Engine No. 33106210

Alternatortype 3 SBE V 456-4

Alternator Make VEM

Alternator No. 3082 00 200

Alternator Efficiency _____ % at rated load

Rated Speed 1500 R. P. M.

Generating Set Rated Output 950 KVA according to

Generating Set Rated Output at Site _____

at _____ mm Hg mercury baromatric pressure

and _____ °C ambient air temperature

Admissible Overload _____ % for one hour within 6 hours

Rated Voltage 400/231 V

Rated Current 1098 A = 1.0/1372 A ≤ 0.8

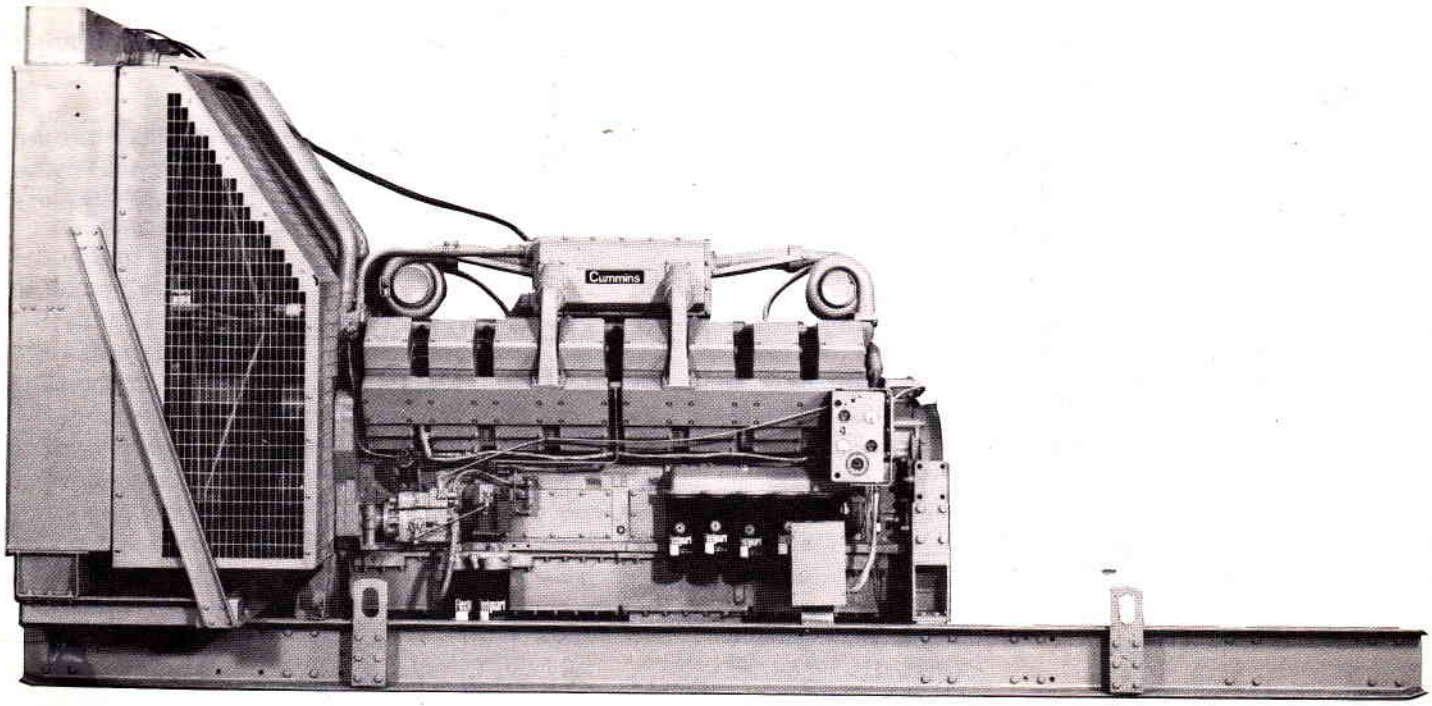

Parts Ordering for: KTA-3067-G

Genuine Cummins Parts and service facilities are worldwide. There are more than 3700 Cummins Sales and Service locations in the principal cities of the United States and Canada, and more than 800 Sales and Service locations situated elsewhere throughout the free world. Each distribution outlet is thoroughly equipped with technical data, factory-trained mechanics, modern equipment and a full, adequate stock of Genuine Cummins Parts.

For quicker and better service, your parts requirements should be ordered from your nearest Cummins Distributor or Dealer. At any of the locations prompt, intelligent, courteous service is a basic trademark. Each is ready and eager to help in every possible way through personal contact or through the mail - at your convenience.

The satisfactory ordering and receiving of parts by the purchaser is greatly dependent upon the proper use of available information. In order that all avoidable errors may be eliminated, the following instructions are offered as the purchaser's guide:

Write your order clearly, using a typewriter if possible.

Be sure to list the correct part number. If in doubt as to the correct part number, state the model and serial number of the engine on which the part is to be used. Part numbers are usually located in various places on the part itself.

When possible, arrange your purchase order in part number numerical sequence.

Always specify shipping instructions - "Best Way" is satisfactory if you have no preference.

State your company name and shipping address clearly.

Genuine Cummins Parts mean QUALITY! They're designed and engineered to fit best in your Cummins Diesel. Each part is made of the highest quality material - on the most accurate of machines - by the top craftsmen of the trade.

You can be sure a Genuine Cummins Part will fit better - do the job better - lessen the chances of costly breakdown. When you buy replacement parts, buy quality. Buy Genuine Cummins Parts!

YOU OWN THE BEST...REPAIR WITH THE BEST

CUSTOMER SERVICE INFORMATION

This Parts Catalog contains parts information for the KTA-3067-G

Part numbers appearing in ( ) are for identification purposes only and should not be used when ordering service replacement parts.

The form below is provided for your convenience and when properly filled out, will allow proper identification of your unit and the normal maintenance items. Parts information errors that could cause extended down time could be avoided if the information on this form is referred to when ordering parts from your Cummins Distributor or Dealer.

ALWAYS SPECIFY ENGINE MODEL AND SERIAL NUMBER
WHEN ORDERING PARTS FROM THIS CATALOG

Engine Model_____ Engine Serial No._____

MFG Make_____ Model_____ Chassis No._____

Fuel Pump Assembly No._____ Injector No._____

Belt, Fan_____ Belt, Water Pump_____ Belt, Gen._____

Element, Fuel Filter_____ Full Flow Lub. Filter_____

Air Cleaner_____ By-Pass Lub. Filter_____

Special Equipment

Cummins Distributor_____

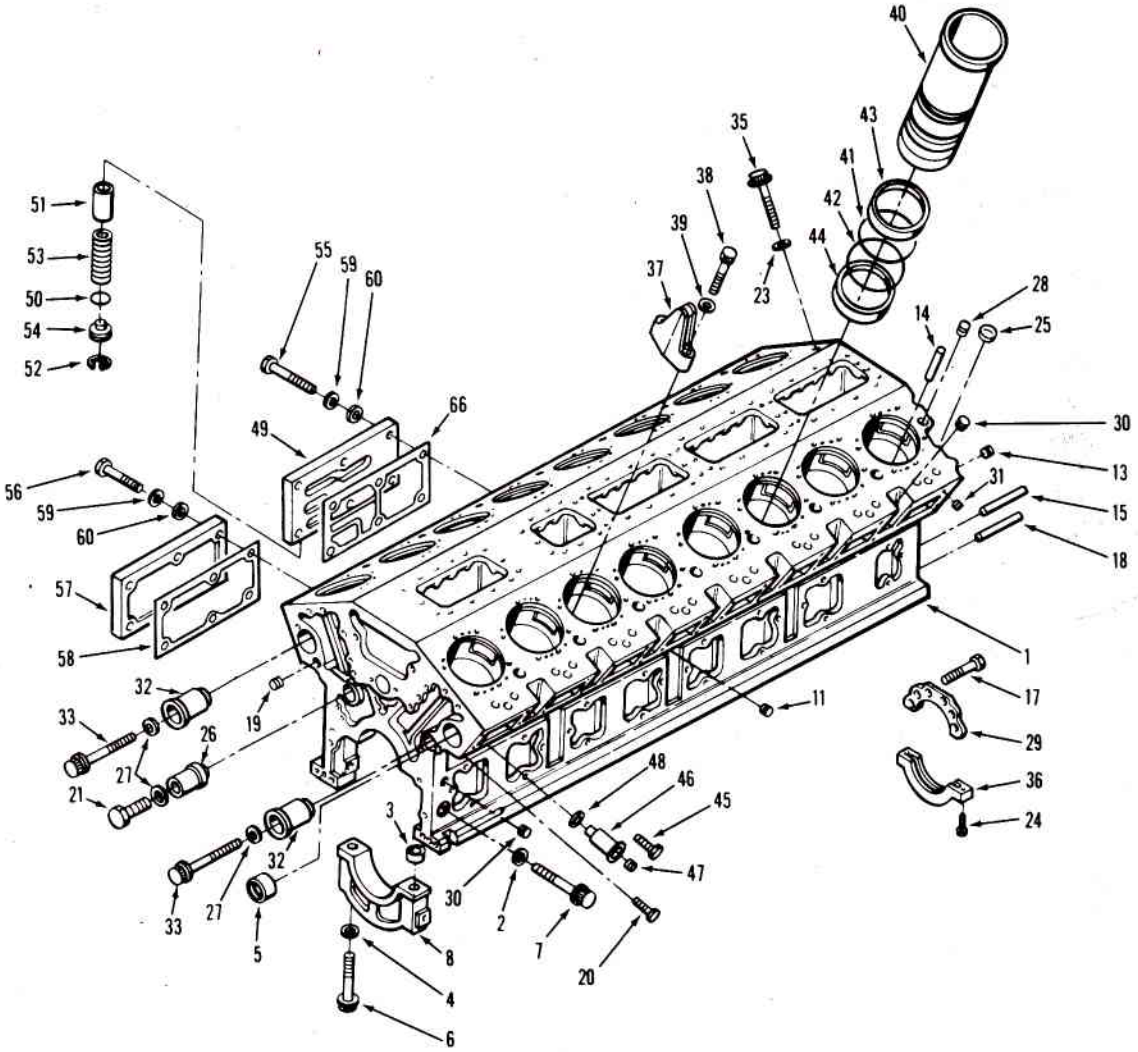
40
43
35
41
38
42
39
44
37
23
28
14
25
51
53
50
54
52
55
59
60
66
49
30
13
31
15
18
56
59
60
57
58
1
17
29
36
24
32
19
11
33
26
27
21
48
46
45
47
3
32
33
27
5
30
2
7
20
8
4
6

REF. NO.	PART NUMBER	PART NAME	NO. REQ'D.
		CYLINDER BLOCK	
1	3012186	Block, cylinder (3016294)	1
2	139990	Washer (main bearing)	18
3	205149	Dowel (main bearing cap)	9
4	205222	Washer (main bearing cap)	18
5	205230	Bushing, cam	34
6	205573	Capscrew (main bearing cap)	18
7	205584	Capscrew (main bearing side lock)	18
8	206587	Cap, main bearing (2, 3, 4, 5, 6, 7 & 8)	7
8	206588	Cap, main bearing (1 & 9)	2
	S-610	Washer, lock	6
11	3008470	Plug, pipe	4
	S-995	Plug, pipe	6
13	3008468	Plug, pipe	4
14	68445	Pin, groove	32
15	70662	Dowel (flywheel housing)	2
17	106069	Capscrew	6
18	148582	Dowel (rear gear housing)	2
19	175830	Plug, expansion	4
20	176307	Cock, drain	4
21	180261	Capscrew	1
23	205059	Washer	6
24	205199	Capscrew	2
25	206224	Plug, expansion	19
26	206713	Shaft, idler (water pump)	1
27	206714	Washer	3
28	206742	Plug, expansion	16
29	3000138	Retainer, thrust bearing	1
30	3002158	Plug, pipe	22
31	3002993	Dowel, ring	32
32	3004263	Shaft, idler (camshaft)	2
33	3004264	Capscrew	2
35	3007238	Capscrew	96
36	3175281	Plate, retainer	1
		LIFTING BRACKET	
37	205684	Bracket, lifting	4
38	206028	Capscrew, lifting bracket	4
39	205059	Washer	4
		CYLINDER LINER	
40	3007525	Liner, cylinder (3022157)	16
41	205182	O-ring, cylinder (bottom)	16
42	207524	O-ring, cylinder (top)	16
43	205115	Seal, crevice	16
44	3011884*	Insert, ring	16
		*Cylinder liner ring insert is not included in liner kit and must be ordered separately with each cylinder liner kit.	
		PISTON COOLING NOZZLE	
45	152364	Capscrew	16
46	205231	Nozzle, piston cooling	16
47	3002158	Plug, pipe	16
48	3007441	O-ring, piston cooling nozzle	16

REF. NO.	PART NUMBER	PART NAME	NO. REQ'D.
		PISTON COOLING VALVE	
	AR-11509	Valve, piston cooling	1
49	206528	Housing, piston cooling	1
50	70842	O-ring	1
51	205348	Plunger, piston cooling	1
52	110011	Ring, internal retaining	1
53	205349	Spring, piston cooling	1
54	205350	Stop, pressure regulator	1
55	191772	Capscrew, piston cooling housing	6
56	199919	Capscrew, oil jumper	6
57	3000819	Cover, oil jumper	1
66	3011649	Gasket, piston cooling	1
58	3011651	Gasket, oil jumper	1
59	S-604	Washer, lock	12
60	127362	Washer, plain	12
	3008466	Plug, pipe	1
		LINER SHIMS	
	205741	Shim (0.007)	A/R
	205742	Shim (0.008)	A/R
	205743	Shim (0.009)	A/R
	205744	Shim (0.020)	A/R
	205745	Shim (0.031)	A/R
	205746	Shim (0.062)	A/R

PARTS INDENTED ARE INCLUDED IN THE PART UNDER WHICH THEY ARE INDENTED

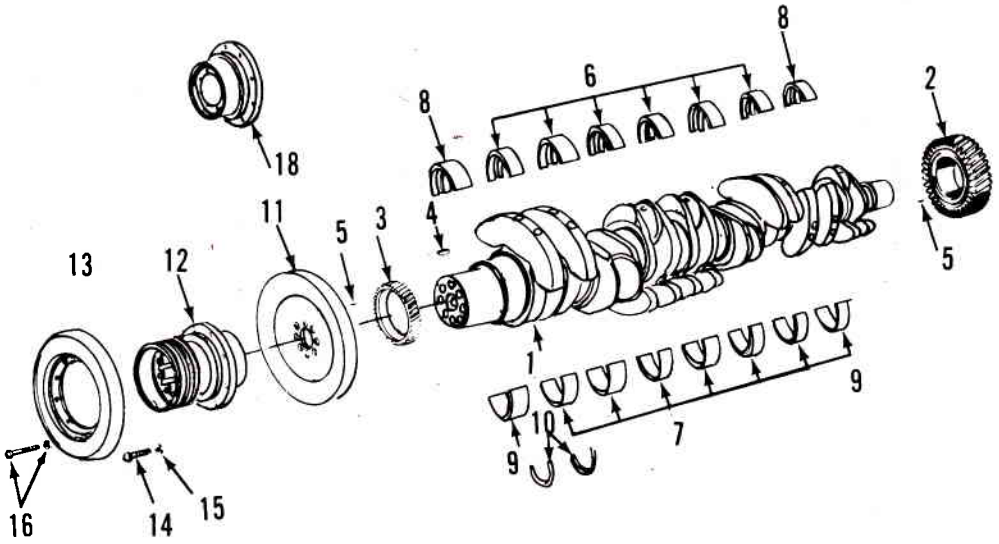

REF. NO.	PART NUMBER	PART NAME	NO. REQ'D.
		CRANKSHAFT	
1	3011431	Assembly, crankshaft and counter-weights (3004690)	1
2	206749	Gear, crankshaft (rear)	
3	3004262	Gear, crankshaft (front)	1
4	206904	Key, crankshaft gear (front)	1
5	131584	Pin, roll	2
		MAIN BEARINGS	
	3018210	Bearing, main set (Standard)	
6	206580	Bearing, main (No. 2, 3, 4, 5, 6, 7 and 8 upper)	7
7	206590	Bearing, main (No. 2, 3, 4, 5, 6, 7 and 8 lower)	7
8	206600	Bearing, main (No. 1 and 9 upper)	2
9	206610	Bearing, main (No. 1 and 9 lower)	2
10	3000139	Bearing, thrust ring	2
	3018211	Bearing, main set (0.010) undersize	
6	206581	Bearing, main (No. 2, 3, 4, 5, 6, 7 and 8 upper)	7
7	206591	Bearing, main (No. 2, 3, 4, 5, 6, 7 and 8 lower)	7
8	206601	Bearing, main (No. 1 and 9 upper)	2
9	206611	Bearing, main (No. 1 and 9 lower)	2
10	3000139	Bearing, thrust	2
	3018212	Bearing, main set (0.020 undersize)	
6	206582	Bearing, main (No. 2, 3, 4, 5, 6, 7 and 8 upper)	7
7	206592	Bearing, main (No. 2, 3, 4, 5, 6, 7 and 8 lower)	7
8	206602	Bearing, main (No. 1 and 9 upper)	2
9	206612	Bearing, main (No. 1 and 9 lower)	2
10	3000139	Bearing, thrust	2

REF. NO.	PART NUMBER	PART NAME	NO. REQ'D.
		MAIN BEARINGS (Cont'd.)	
	3018213	Bearing, main set (0.030) undersize	
6	206583	Bearing, main (No. 2, 3, 4, 5, 6, 7 and 8 upper)	7
7	206593	Bearing, main (No. 2, 3, 4, 5, 6, 7 and 8 lower)	7
8	206603	Bearing, main (No. 1 and 9 upper)	2
9	206613	Bearing, main (No. 1 and 9 lower)	2
10	3000139	Bearing, thrust	2
	3018214	Bearing, main set (0.040) undersize	
6	206584	Bearing, main (No. 2, 3, 4, 5, 6, 7 and 8 upper)	7
7	206594	Bearing, main (No. 2, 3, 4, 5, 6, 7 and 8 lower)	7
8	206604	Bearing, main (No. 1 and 9 upper)	2
9	206614	Bearing, main (No. 1 and 9 lower)	2
10	3000139	Bearing, thrust	2
		VIBRATION DAMPER AND PULLEY	
11	3005973	Damper, vibration	1
12	3005463	Pulley, crankshaft	1
13	3015464	Damper, vibration	1
		MOUNTING PARTS	
14	3023539	Capscrew, twelve point	8
15	205059	Washer, plain	8
16	3019574	Capscrew	8
•		**VIBRATION DAMPER ADAPTER**	
18	3015467	Adapter, vibration damper	1

PARTS INDENTED ARE INCLUDED IN THE PART UNDER WHICH THEY ARE INDENTED

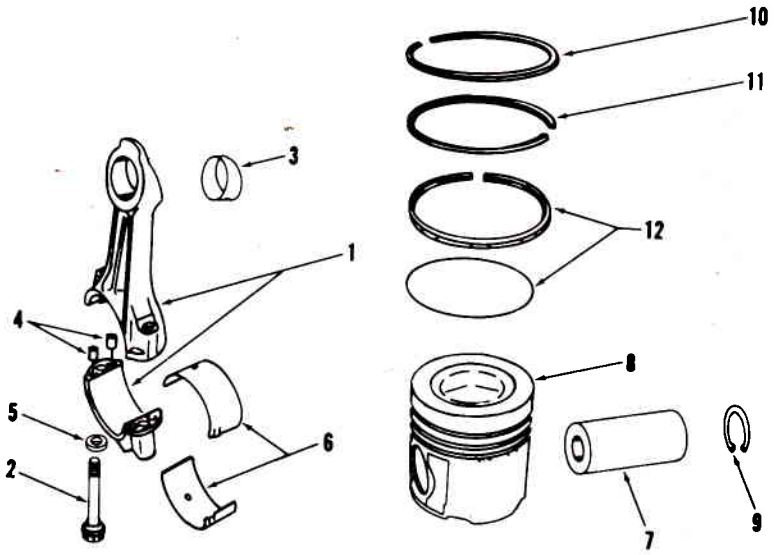

REF. NO.	PART NUMBER	PART NAME	NO. REQ'D.	REF. NO.	PART NUMBER	PART NAME	NO. REQ'D.
		CONNECTING ROD					
1	3014452	Rod, connecting (3000573)	16				
2	3013266	Bolt, connecting rod	32				
3	3000965	Bushing, piston pin	16				
4	69558	Dowel, connecting rod	32				
5	205126	Washer, connecting rod	32				
6	206160	Bearing, connecting rod	32				
		*Connecting rod bearing shells may be purchased in 0.010", 0.020", 0.030" and 0.040" oversize.					
	206161	Bearing, connecting rod (0.010)					
	206162	Bearing, connecting rod (0.020)					
	206163	Bearing, connecting rod (0.030)					
	206164	Bearing, connecting rod (0.040)					
		PISTON					
	AR-12313	Piston assembly (Std)	16				
7	205200	Pin, piston	16				
8	3004730	Piston	16				
9	205269	Ring, snap	32				
		PISTON RING SET					
	AR-10680	Ring set, piston (Std)	16				
10	205290	Ring, compression top	16				
11	205700	Ring, compression intermediate	16				
12	205710	Ring, control	16				

PARTS INDENTED ARE INCLUDED IN THE PART UNDER WHICH THEY ARE INDENTED

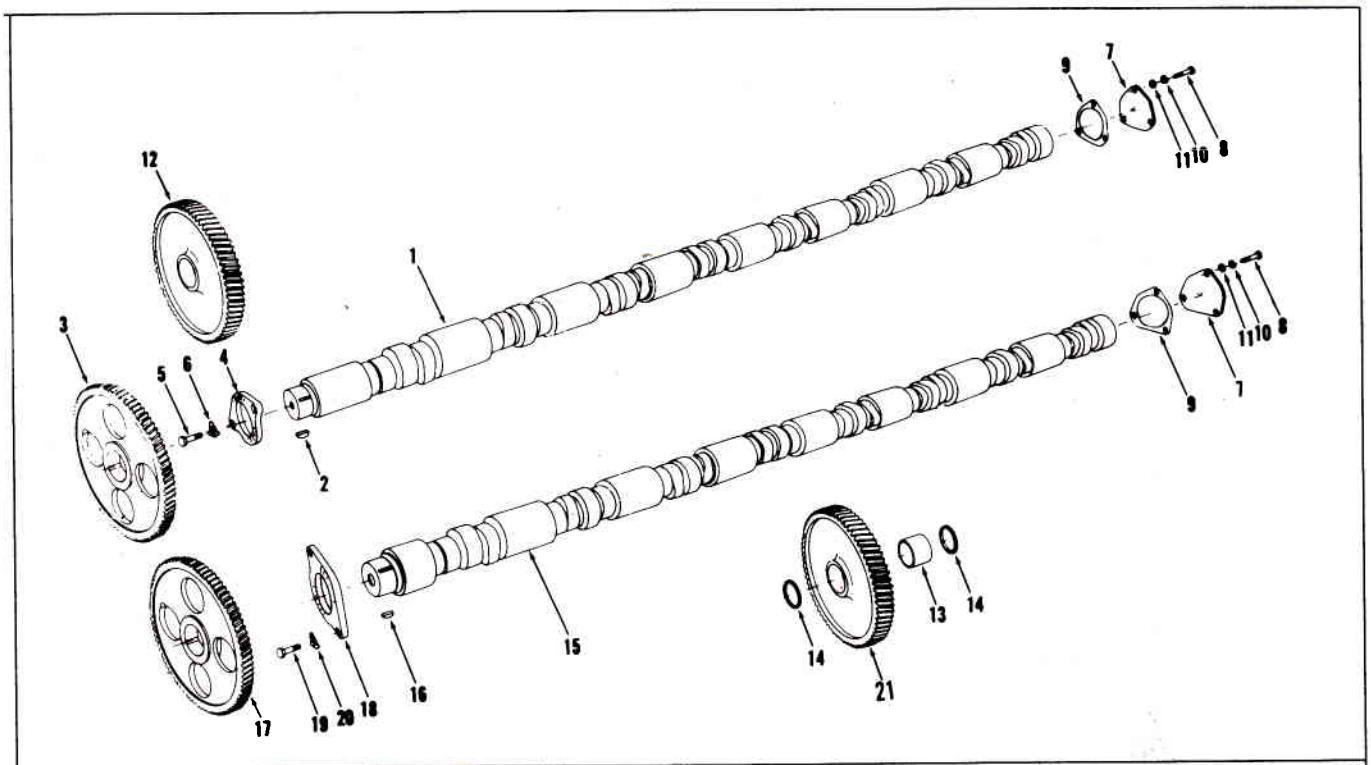

REF. NO.	PART NUMBER	PART NAME	NO. REQ'D.
		CAMSHAFT AND GEAR RIGHT BANK	
1	3006299	Camshaft, less gear (right bank)	1
2	S-302	Key, camshaft	1
3	206747	Gear, camshaft	1
4	3007971	Plate, camshaft thrust	1
5	S-112	Capscrew, thrust plate	2
6	68908	Lockplate	2
		REAR CAMSHAFT COVER	
7	207373	Cover, rear camshaft	2
8	S-112	Capscrew, rear cover	6
9	205236	Gasket, rear cover	2
10	S-604	Washer, lock	6
11	S-602	Washer, plain	6
		CAMSHAFT IDLER GEAR RIGHT BANK	
12	3004681	Assembly, gear and bushing, idler (3004592)	
13	3004686	Bushing, idler gear	1
14	130083	Bearing, thrust	2
		MOUNTING PARTS	
	3004264	Capscrew	2
	3004263	Shaft, idler	2
	206714	Washer, plain	2
		CAMSHAFT AND GEAR LEFT BANK	
15	3006298	Camshaft, less gear (left bank)	1
16	S-302	Key, camshaft	1
17	207248	Gear, camshaft	1
18	3007971	Plate, camshaft thrust	1
19	S-112	Capscrew, thrust plate	2
20	68908	Lockplate	2

REF. NO.	PART NUMBER	PART NAME	NO. REQ'D.
		CAMSHAFT IDLER GEAR LEFT BANK	
21	3004683	Assembly, gear and bushing, idler (3004594)	1
13	3004686	Bushing, idler gear	1
14	130083	Bearing, thrust	2
		MOUNTING PARTS	
	3004264	Capscrew	2
	3004263	Shaft, idler	2
	206714	Washer, plain	2

Note: Camshaft is not available with gear. If gear and key are needed, order separately.

PARTS INDENTED ARE INCLUDED IN THE PART UNDER WHICH THEY ARE INDENTED

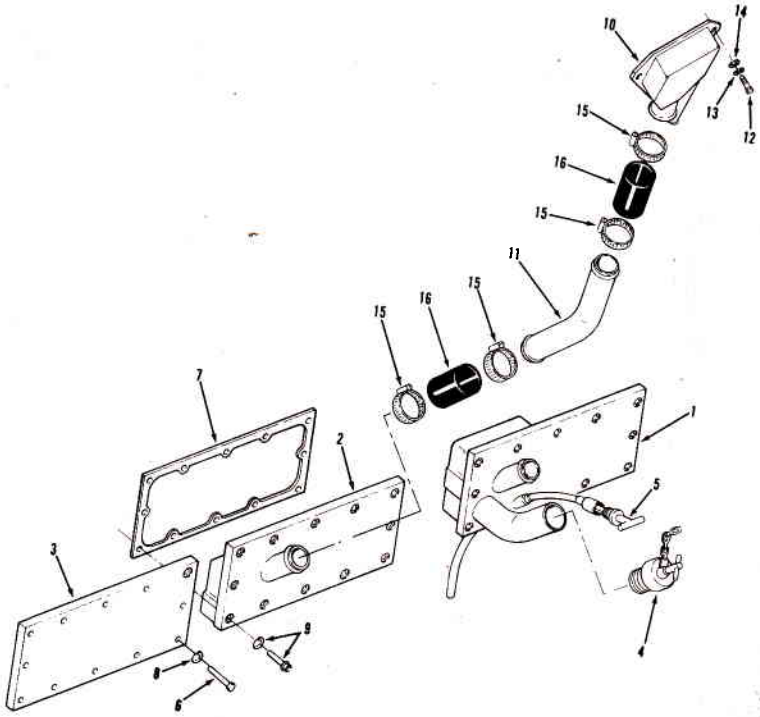

REF. NO.	PART NUMBER	PART NAME	NO. REQ'D.
		HAND HOLE COVER	
1	3024913*	Cover, hand hole with filler tube, oil gauge tube and breather tube	1
2	3021438**	Cover, hand hole with breather tube	1
3	3175855	Cover, hand hole	6
4	107981	Cap, oil filler	1
5	206571	Bayonet, oil gauge	1
		*This cover mounted on left bank.	
		**This cover mounted on right bank.	
		MOUNTING PARTS	
6	S-112	Capscrew	72
7	3175856	Gasket, hand hole cover	8
8	S-604	Lockwasher	72
9	3012471	Capscrew and Lockwasher	24

REF. NO.	PART NUMBER	PART NAME	NO. REQ'D.
		CRANKCASE BREATHER	
10	3021436	Breather, crankcase	2
11	3021437	Tube, breather	2
		MOUNTING PARTS	
12	205354	Capscrew, twelve point	4
13	S-604	Lockwasher	4
14	S-602	Plain washer	4
15	43828-C	Clamp, hose	8
16	3026395	Hose, plain	4

PARTS INDENTED ARE INCLUDED IN THE PART UNDER WHICH THEY ARE INDENTED

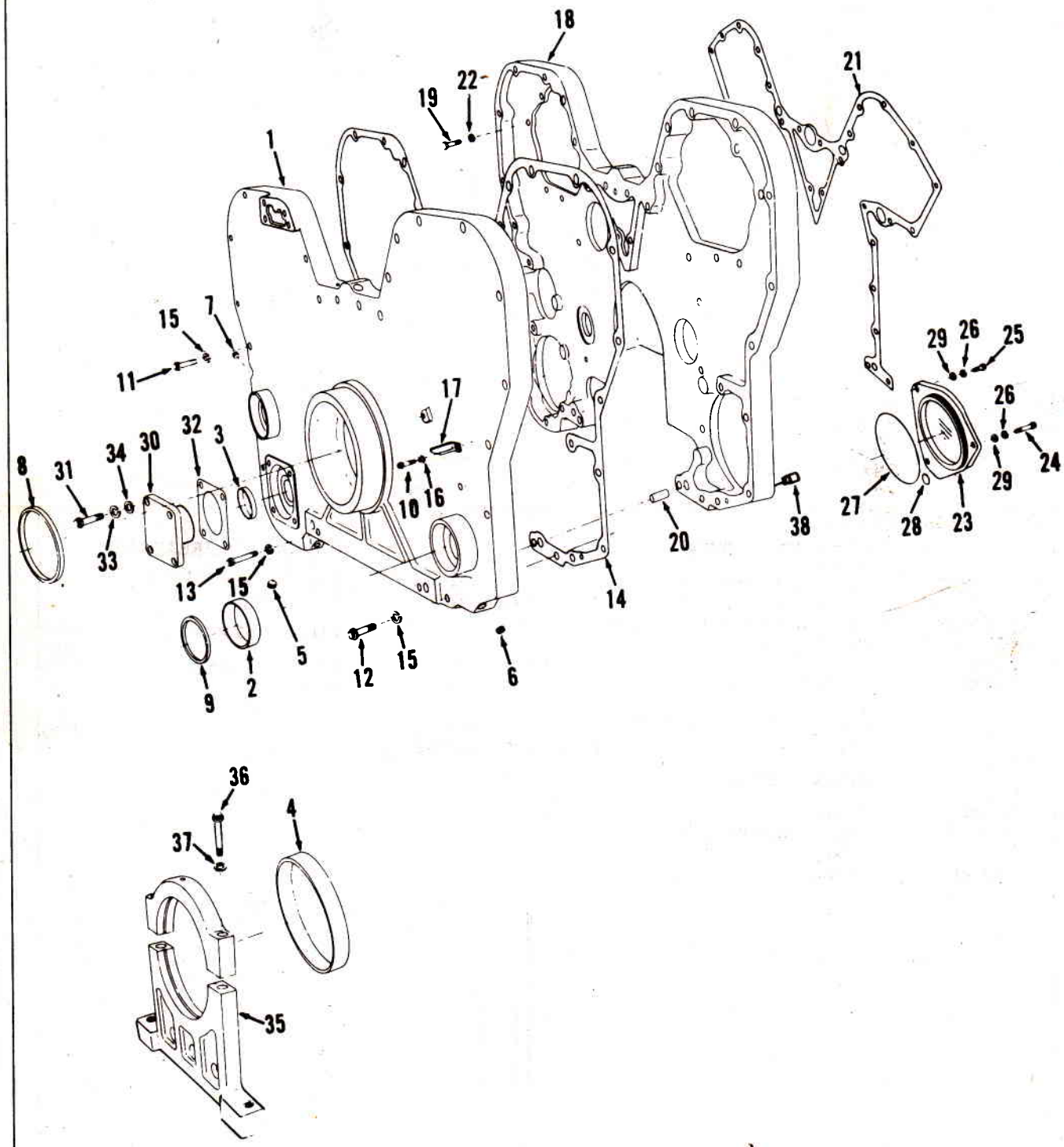
18
22
19
21
1
15
7
11
17
29
26
25
26
32
3
30
34
8
31
10
16
24
29
33
27
28
23
38
20
13
15
14
5
12
15
6
9
2

36
4
37
35

REF. NO.	PART NUMBER	PART NAME	NO. REQ'D.
		FRONT GEAR HOUSING COVER	
1	3021406	Cover, gear housing (3003325)	1
2	132770	Bushing, accessory drive	2
3	205133	Bushing, power steering	1
4	205683	Bushing, trunnion	1
5	3008466	Plug, pipe	3
6	3002158	Plug, pipe	5
8	3016792	Seal, oil (front crank)	1
9	3016788	Seal, oil (accessory drive)	2
		MOUNTING PARTS	
10	206527	Capscrew (pointer)	1
11	206031	Capscrew	7
12	206410	Capscrew	12
13	206451	Capscrew	2
14	3008428	Gasket	1
15	135783	Washer, lock	21
16	103844	Washer, lock (pointer)	1
17	206526	Pointer, timing	1
		FRONT GEAR HOUSING	
18	3008429	Housing, front gear	1
		MOUNTING PARTS	
19	103009	Capscrew	8
20	102978	Dowel	1
21	3010719	Gasket, front gear housing	1
22	S-610	Washer, lock	15
	102979	Pin, dowel	1
		COVER, HYDRAULIC HOLE REAR	
23	206158	Cover, rear hydraulic hole	1
24	S-162-A	Capscrew, cover	2
25	103023	Capscrew, cover	1
26	135783	Washer, lock	3
27	70861	O-ring	1
28	145600	O-ring	1
29	69324	Washer, plain	3
		COVER, HYDRAULIC HOLE FRONT	
30	206406	Flange, blind plug	1
31	205378	Capscrew, cover	4
X 32	206407	Gasket, cover	1
33	111445	Washer, lock	4
34	127571	Washer, plain	4
		FRONT ENGINE SUPPORT	
35	AR-11510	Support, front engine	1
36	205681	Capscrew	2
37	127316	Washer	2

PARTS INDENTED ARE INCLUDED IN THE PART UNDER WHICH THEY ARE INDENTED

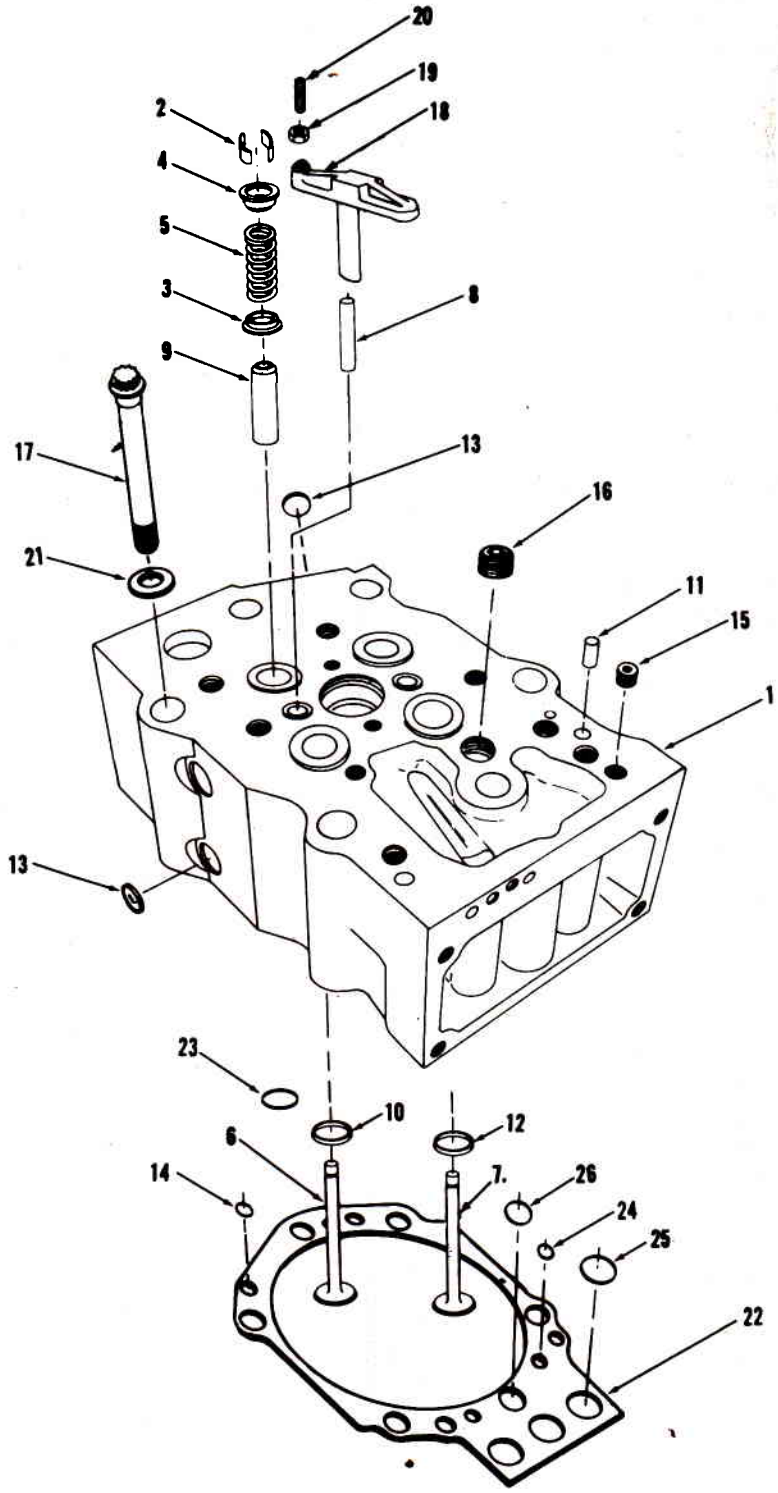
20
19
18
2
8,9
4
5
3
8
9
17
13
16
21
11
15
1
13
23
10
12
6
7.
26
14
24
25
22

REF. NO.	PART NUMBER	PART NAME	NO. REQ'D.	REF. NO.	PART NUMBER	PART NAME	NO. REQ'D.
		CYLINDER HEAD					
1	3018868	Head, cylinder (3009088)	16				
2	205091	Collet, valve	128				
3	3001663	Guide, valve spring	64				
4	205094	Retainer, valve spring	64				
5	205208	Spring, valve	64				
6	3007225	Valve, exhaust	32				
7.	207241	Valve, intake	32				
8	205169	Guide, crosshead	32				
9	3018818	Guide, valve stem	64				
10	205093	Insert, valve seat	64				
11	68445	Pin, groove	32				
12	3009109	Plate, air deflector	32				
13	205401	Plug, expansion	128				
14	206224	Plug, expansion	32				
15	3002158	Plug, pipe	16				
16	3013257	Plug, pipe	16				
		MOUNTING PARTS					
17	3007238	Capscrew, cylinder head	96				
18	205121	Crosshead, valve intake & exhaust	32				
19	S-273	Nut	32				
20	147389	Screw	32				
21	205059	Washer, cylinder head	96				
22	3022340	Gasket, cylinder head (205479)	16				
23	205448	Grommet, cylinder head water	64				
24	205852	Grommet, cylinder head oil	16				
25	205855	Grommet, cylinder head push-rod	48				
26	205858	Grommet, cylinder head bolt	16				

PARTS INDENTED ARE INCLUDED IN THE PART UNDER WHICH THEY ARE INDENTED

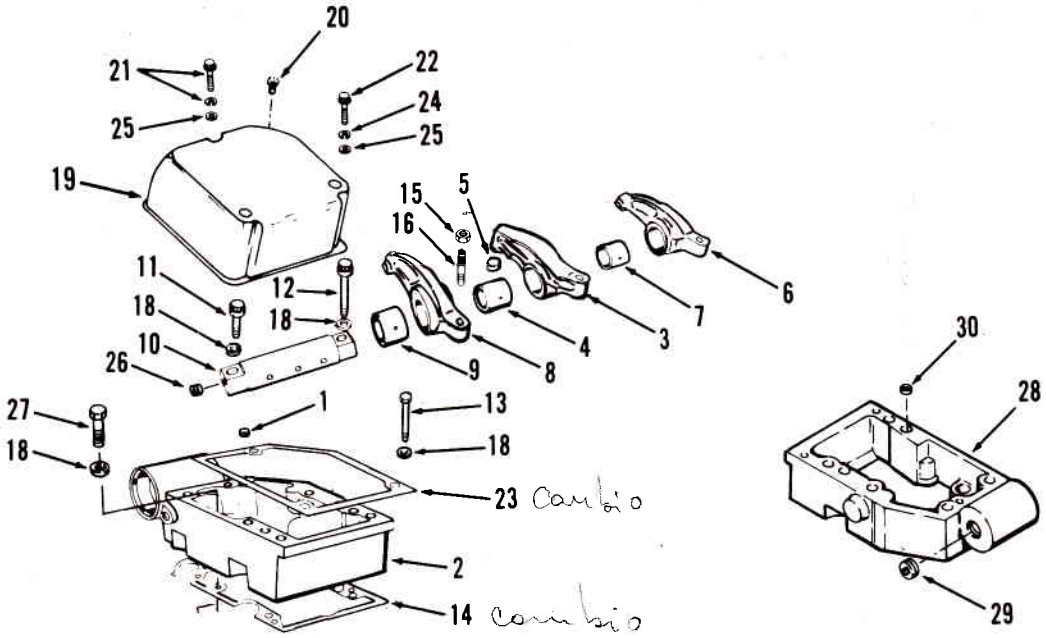

REF. NO.	PART NUMBER	PART NAME	NO. REQ'D.
		ROCKER LEVER HOUSING	
	3200499	Assembly, rocker lever housing	14
1	205129	Dowel, ring	14
2	3200483	Housing	14
3	3013300	Lever, injector rocker (3013299)	16
4	207226	Bushing, injector rocker lever	16
5	194037	Socket, rocker lever	16
6	205138	Lever, intake rocker and bushing assembly (205123)	16
7	207344	Bushing	16
8	3007420	Lever, exhaust rocker and bushing assembly (3013287)	16
9	207344	Bushing	16
10	207228	Shaft, rocker arm	16
26	203933	Plug, rocker lever shaft	16
28	3200482	Housing, rocker	1
29	S-995	Plug, pipe	1
30	205129	Dowel, ring	1
28	3200480	Housing, rocker	1
29	S-995	Plug, pipe	1
30	205129	Dowel, ring	1
		MOUNTING PARTS	
27	S-125	Capscrew	16
11	205393	Capscrew	16
12	205394	Capscrew	16
13	108602	Capscrew	80
14	3005956	Gasket, rocker lever housing	16
15	S-212	Nut	48
16	168306	Screw, adjust	48
18	205128	Washer	96

REF. NO.	PART NUMBER	PART NAME	NO. REQ'D.
		ROCKER HOUSING COVER	
19	3010247	Cover, rocker housing (3010388)	16
20	S-181-B	Capscrew (when Jacob Brake not used)	16
21	3012474	Capscrew & lockwasher assembly	16
22	S-169-A	Capscrew	32
23	3008401	Gasket, rocker housing cover	16
24	S-604	Lockwasher	32
25	S-602	Washer, plain	48

PARTS INDENTED ARE INCLUDED IN THE PART UNDER WHICH THEY ARE INDENTED

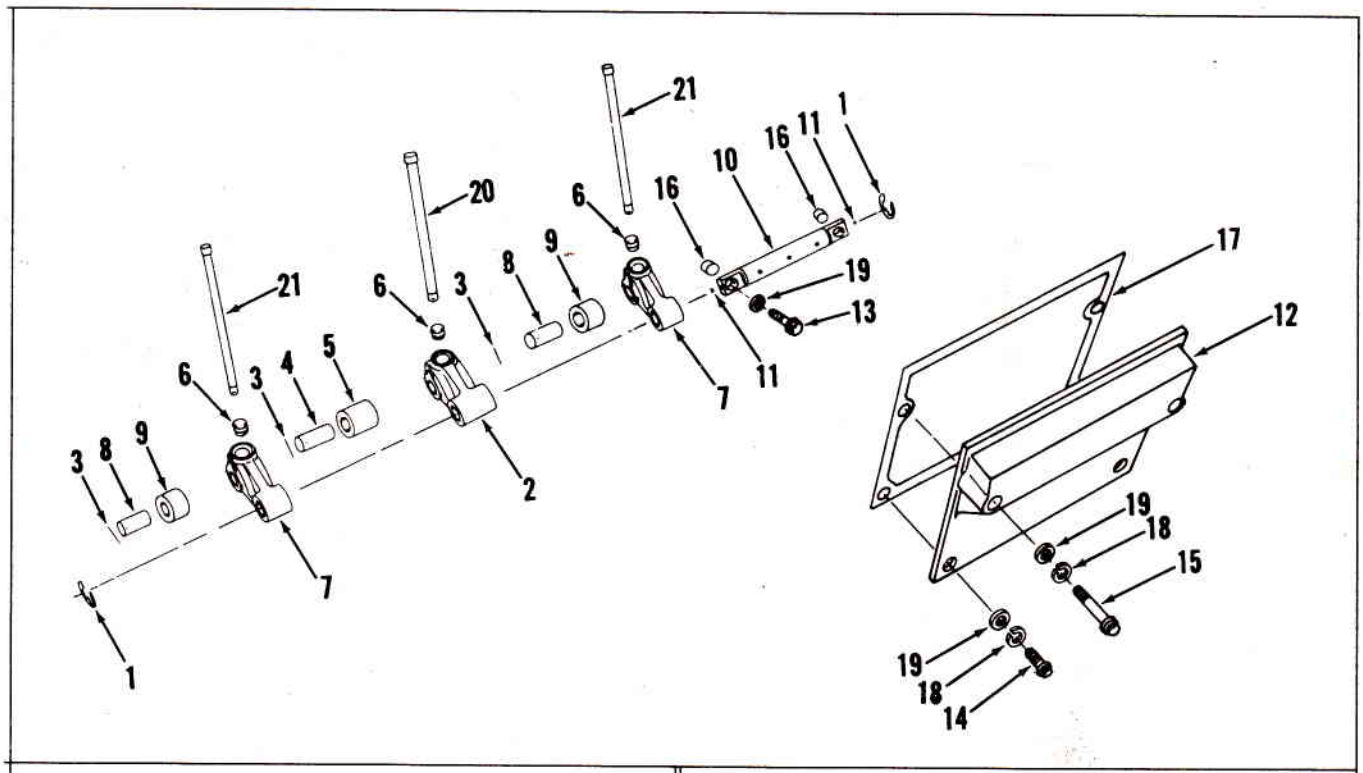

REF. NO.	PART NUMBER	PART NAME	NO. REQ'D.
		CAM FOLLOWER AND HOUSING	
1	205439	Ring, retaining	32
2	3008427	Follower, cam injector (206231)	16
3	205438	Lockwire, cam roller pin	16
4	205068	Pin, cam follower injector	16
5	3007120	Roller, cam follower injector	16
6	107738	Socket, cam follower	16
7	3008426	Follower, cam intake and exhaust (205069)	32
3	205438	Lockwire, cam roller pin	32
8	205071	Pin, cam follower intake and exhaust	32
9	3007121	Roller, cam follower intake and exhaust	32
6	107738	Socket, cam follower	32
10	205301	Shaft & plug, cam follower	16
11	205227*	Plug, cup	32
12	3009631	Cover, cam follower	16
		MOUNTING PARTS	
13	3002886	Capscrew, shaft, cam follower	32
14	S-103-D	Capscrew	32
15	S-126	Capscrew	32
16	3002993	Dowel	32
17	3008404	Gasket, cam follower cover	16
18	S-604	Washer, lock	64
19	127362	Washer, plain	96
		PUSH RODS	
20	3017961	Rods, injector push	16
21	205492	Rods, intake and exhaust push	32

Note: Crankcase breather is located on cylinder block. See Page 1.

*Not sold separately.

REF. NO.	PART NUMBER	PART NAME	NO. REQ'D.

PARTS INDENTED ARE INCLUDED IN THE PART UNDER WHICH THEY ARE INDENTED

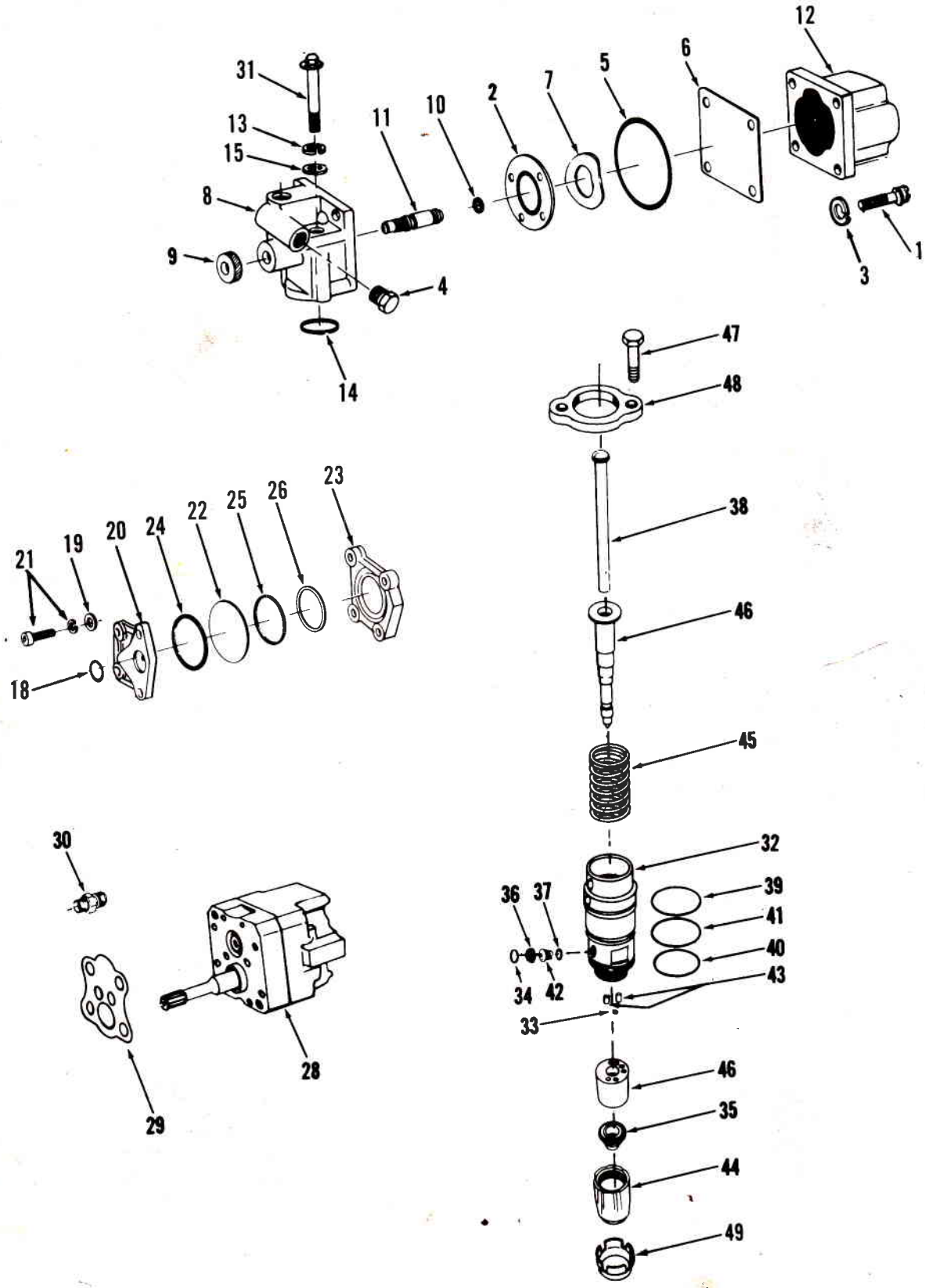

CYLINDRICAL PT (TYPE B) INJECTOR

REF. NO.	PART NUMBER	PART NAME	NO. REQ'D.
		PT FUEL SYSTEM	
		Each Cummins PT Fuel Pump is calibrated to obtain the best performance and fuel economy for your engine. Your Cummins Distributor or Dealer has the special tools required for complete rebuild and calibration.	
		Caution: Do not disturb the fuel pressure settings or the throttle screw settings, as serious damage to your engine may result.	
		Only PT Fuel System parts which can be replaced without pump calibration are listed here. Your Cummins Distributor will record the specific part number of your complete PT Fuel Pump in the front of this catalog.	
		SHUTDOWN VALVE (Rapid Restart)	
	3017993	Valve, shut down (24 volt)	1
1	138764	Capscrew, pan head	1
2	196057	Disc, valve	1
3	S-607	Lockwasher	3
4	195265	Plug, pipe	1
5	129888	Seal, rectangular	2
6	129839	Shield, shutoff valve	1
7	129768	Spring, shutoff valve	1
	3013642	Body, shutoff valve	1
8	3014010	Body	1
9	3013645	Knob	1
10	190876	Seal, Oring	1
11	3013036	Shaft, shutoff valve	1
12	3017994	Solenoid	1
1	3018047	Screw, fillister head	3
	3017995	Actuator	1
	3019298	Housing, actuator	1
	3012999	Disc, actuator	1
		MOUNTING PARTS	
12	S-189-C	Capscrew	2
13	181466	Lockwasher	2
14	154087	"O" ring	1
15	67684	Washer, plain	2
		FUEL PUMP DAMPER	
	3015839	Assembly, fuel pump damper	1
	S-170	Capscrew, socket head	2
	181466	Lockwasher	2
18	151900	Seal, rectangular	1
19	70704	Washer	2
	3015838	Damper, fuel pump	1
20	3012421	Body	1
21	3017051	Capscrew, captive	2
22	202897	Diaphragm, damper	1
23	153338	Plate	1
24	100099	Seal, rectangular	1
25	139988	Seal, rectangular	1
26	160514	Washer, plain	1

REF. NO.	PART NUMBER	PART NAME	NO. REQ'D.
		GEAR PUMP	
28	3015837	Pump, gear (1-1/4" R.H.)	1
29	3013646	Gasket, gear pump	1
30	3014582	Adapter, hose, JIC	1
30	3014578	Adapter, hose PTT-SAE	1
		INJECTOR	
	3016676	Injector, less link	16
32	205463	Adapter	16
33	167157	Ball, check	16
	173085	Blank, orifice	16
34	174299	Clip, filter screen	16
35	3001314	Cup	16
36	3008706	Filter, screen	16
37	173086	Gasket, orifice plug	16
39	144967	"O" ring	16
40	193736	"O" ring	16
41	205216	"O" ring	16
42	177282	Orifice	16
43	203426	Pin, spiral	32
44	207245	Retainer, injector cup	16
45	205464	Spring	16
46	3016671	Barrel and plunger	16
		***NOTE:** Parts in 3016671 not sold separately. Available as assembly only.	
		MOUNTING PARTS	
38	205462	Link, injector	16
47	165006	Capscrew	32
48	3006696	Clamp	16
49	207244	Ring, sealing	16
		FUEL PUMP MOUNTING	
	206326	Capscrew	4
	200871	Gasket	1
	S-610	Lockwasher	4
	109859	Spider coupling	1
	S-622	Washer, plain	4
		WARNING	
		Although part numbers are published on this page. Do not attempt to make any fuel pump adjustments or repairs to the fuel pump without reading Service Information Bulletin No. 3379135.	
		AMERICAN BOSCH ELECTRIC GOVERNOR	
	3019635	Actuator, electric governor	1
	3020987	Control, governor. (Speed Control Unit with idle, run, and droop feature.)	1
	3017417	Magnetic pickup. (For engine with SAE "1" or "0" flywheel housing).	1
	3017418	Magnetic pickup. (For engine with SAE "00" flywheel housing).	1

PARTS INDENTED ARE INCLUDED IN THE PART UNDER WHICH THEY ARE INDENTED

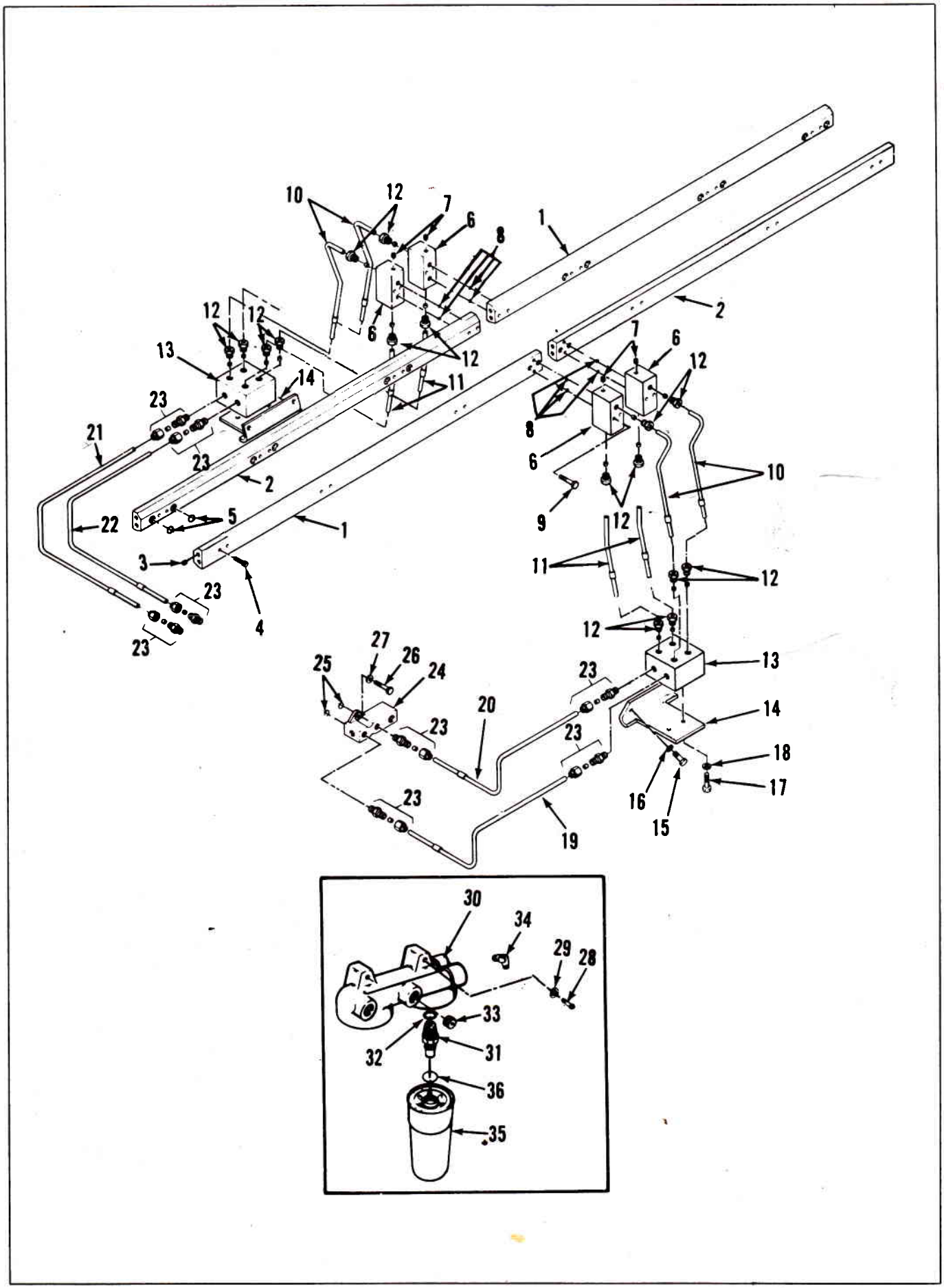
1
2
3
4
5
6
7
8
9
10
11
12
13
14
15
16
17
18
19
20
21
22
23
24
25
26
27
28
29
30
31
32
33
34
35
36

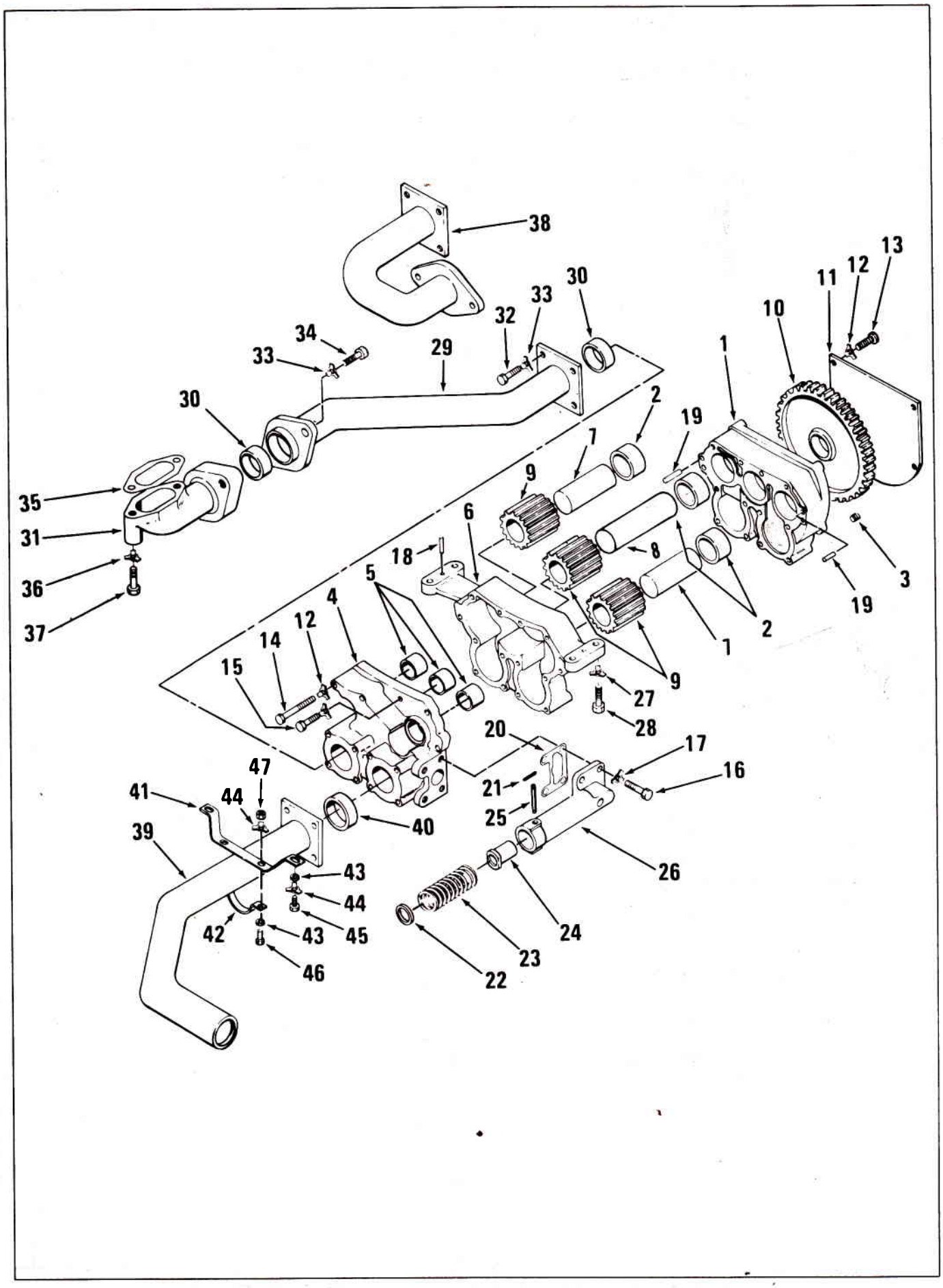
38
30
33
32
34
33
29
30
35
31
36
37
13
12
11
10
1
2
19
7
9
6
18
8
5
4
12
14
15
3
19
2
1
9
27
28
20
17
16
21
25
47
41
44
40
39
43
44
45
42
43
46
26
24
23
22

REF. NO.	PART NUMBER	PART NAME	NO. REQ'D.
		LUBRICATING OIL PUMP	
	3025288	Pump, lubricating oil	1
1	3025286	Assembly, cover and bushing (3025294)	1
2	205548	Bushing	3
3	213395	Plug, expansion	2
4	3175985	Assembly, cover and bushing (3175984)	1
5	205548	Bushing	3
6	3025283	Body, lub pump	1
	3176007	Assembly, gear and shaft	1
8	205544	Shaft	1
9	3000622	Gear	1
	3176008	Assembly, gear and shaft	2
9	3000622	Gear	2
7	3000624	Shaft	2
10	206756	Gear	1
11	205546	Cover	1
12	109319	Lockplate	5
13	S-117	Capscrew	5
14	3026677	Capscrew	2
15	3026678	Capscrew	4
32	3026676	Capscrew	8
18	107948	Dowel, diamond	4
19	69519	Dowel	2
20	3008921	Gasket, pressure relief housing	1
	3021698	Assembly, pressure relief	1
21	107695	Pin, roll	2
22	146177	Washer, plain	1
23	205607	Spring	1
24	3021618	Plunger	1
25	3001719	Pin, retaining	1
26	3021619	Housing, pressure relief	1
16	S-103-D	Capscrew	4
17	68908	Lockplate	4
		MOUNTING PARTS	
27	149134	Lockplate	4
28	S-113	Capscrew	4
		(STANDARD) OIL TRANSFER TUBE (OIL FLOW TO RIGHT BANK)	
29	3025292	Assembly, oil transfer tube	1
30	3008923	Seal, rectangular	2
31	3008924	Connection, oil transfer	1
32	3025146	Capscrew	4
33	68908	Lockplate	6
34	S-112	Capscrew	2
35	3000632	Gasket, oil connection	1
36	151355	Lockplate	2
37	S-121-B	Capscrew	2
		(OPTIONAL) OIL TRANSFER TUBE (OIL FLOW TO LEFT BANK)	
38	3025293	Assembly, oil transfer tube	1

REF. NO.	PART NUMBER	PART NAME	NO. REQ'D.
		OIL SUCTION TUBE	
39	3008925	Assembly, oil suction tube	1
40	3008922	Seal, rectangular	1
		MOUNTING PARTS	
41	3008968	Bracket, oil suction tube	1
42	3008967	Clamp, oil suction tube	1
43	S-602	Washer, plain	4
44	68908	Lockplate	4
45	S-109	Capscrew	2
46	108707	Capscrew	2
47	3175239	Nut	2

PARTS INDENTED ARE INCLUDED IN THE PART UNDER WHICH THEY ARE INDENTED

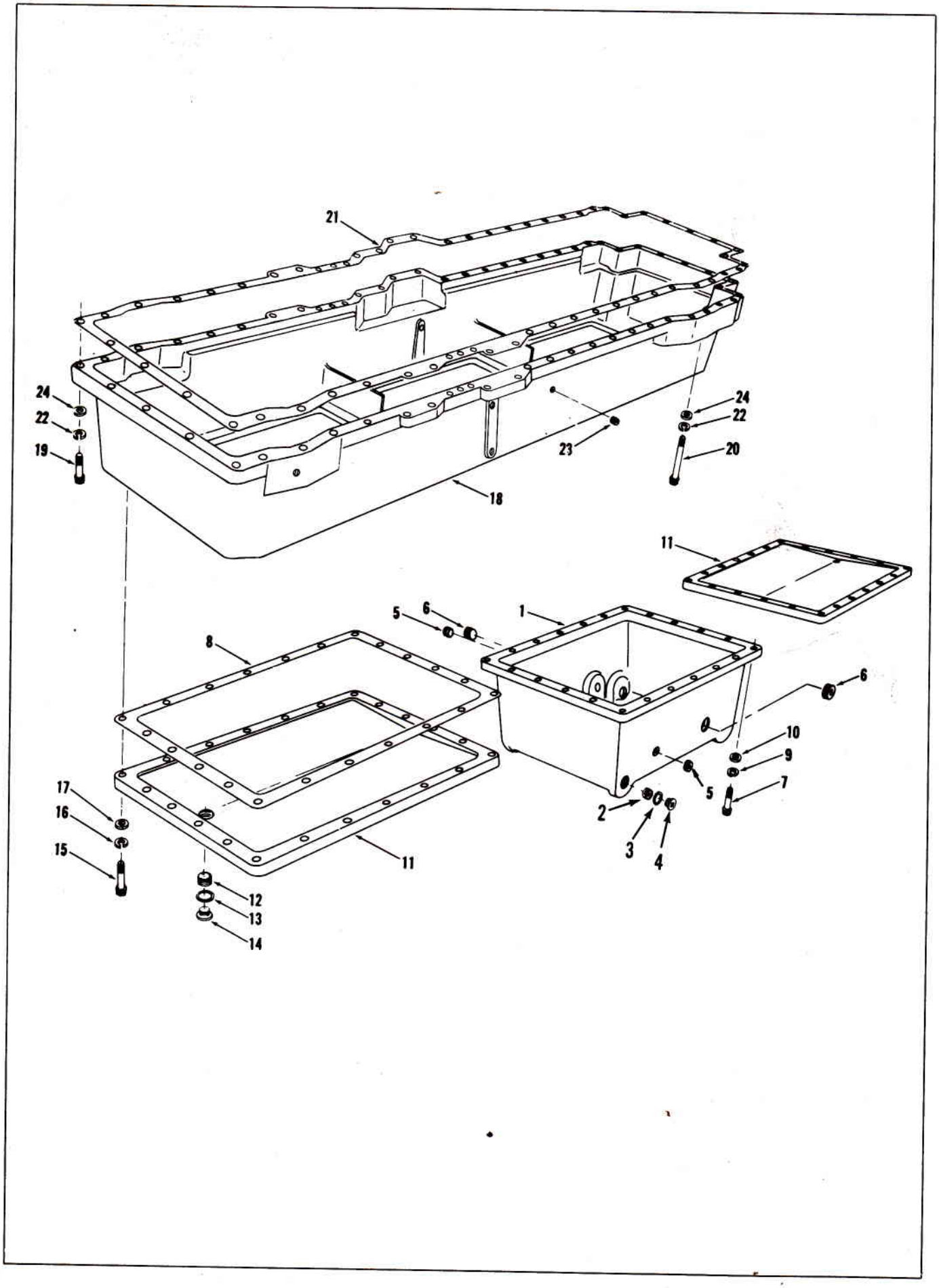
21
24
22
19
24
22
23
20
18
11
5
6
1
8
6
10
9
5
7
17
16
15
2
3
4
11
12
13
14

REF. NO.	PART NUMBER	PART NAME	NO. REQ'D.	REF. NO.	PART NUMBER	PART NAME	NO. REQ'D.
		OIL PAN					
1	AR-12092	Pan, oil (206100)	1				
2	200845	Insert, thread	2				
3	67946	Gasket, drain plug	2				
4	69962	Plug, oil pan drain	2				
5	3008468	Plug, pipe	2				
6	3008470	Plug, pipe	2				
		MOUNTING PARTS					
7	106069	Capscrew	22				
8	206098	Gasket, oil pan	1				
9	135783	Washer, lock	22				
10	3175027	Washer, plain	22				
		OIL PAN ADAPTER COVER					
11	AR-12085	Cover, oil pan adapter (206099)	3				
12	200845	Insert, thread	3				
13	67946	Gasket, drain plug	3				
14	69962	Plug, oil drain	3				
		MOUNTING PARTS					
15	106069	Capscrew	44				
8	206098	Gasket, cover	3				
16	135783	Washer, lock	44				
17	3175027	Washer, plain	44				
		OIL PAN ADAPTER					
18	3024909	Adapter, oil pan	1				
		MOUNTING PARTS					
19	106069	Capscrew	47				
20	108767	Capscrew	29				
21	3000630	Gasket, oil pan adapter	1				
22	135783	Washer, lock	74				
23	3002158	Plug, pipe	1				
24	69324	Washer, plain	74				
		Note: For suction and transfer tube see oil pump, Page 17.					
		OIL DRAIN VALVE					
	3023067	Valve, oil drain	1				
	S-920	Nipple, pipe	1				
	S-915-A	Plug, pipe	1				
	123824	Plug, drain	1				

PARTS INDENTED ARE INCLUDED IN THE PART UNDER WHICH THEY ARE INDENTED

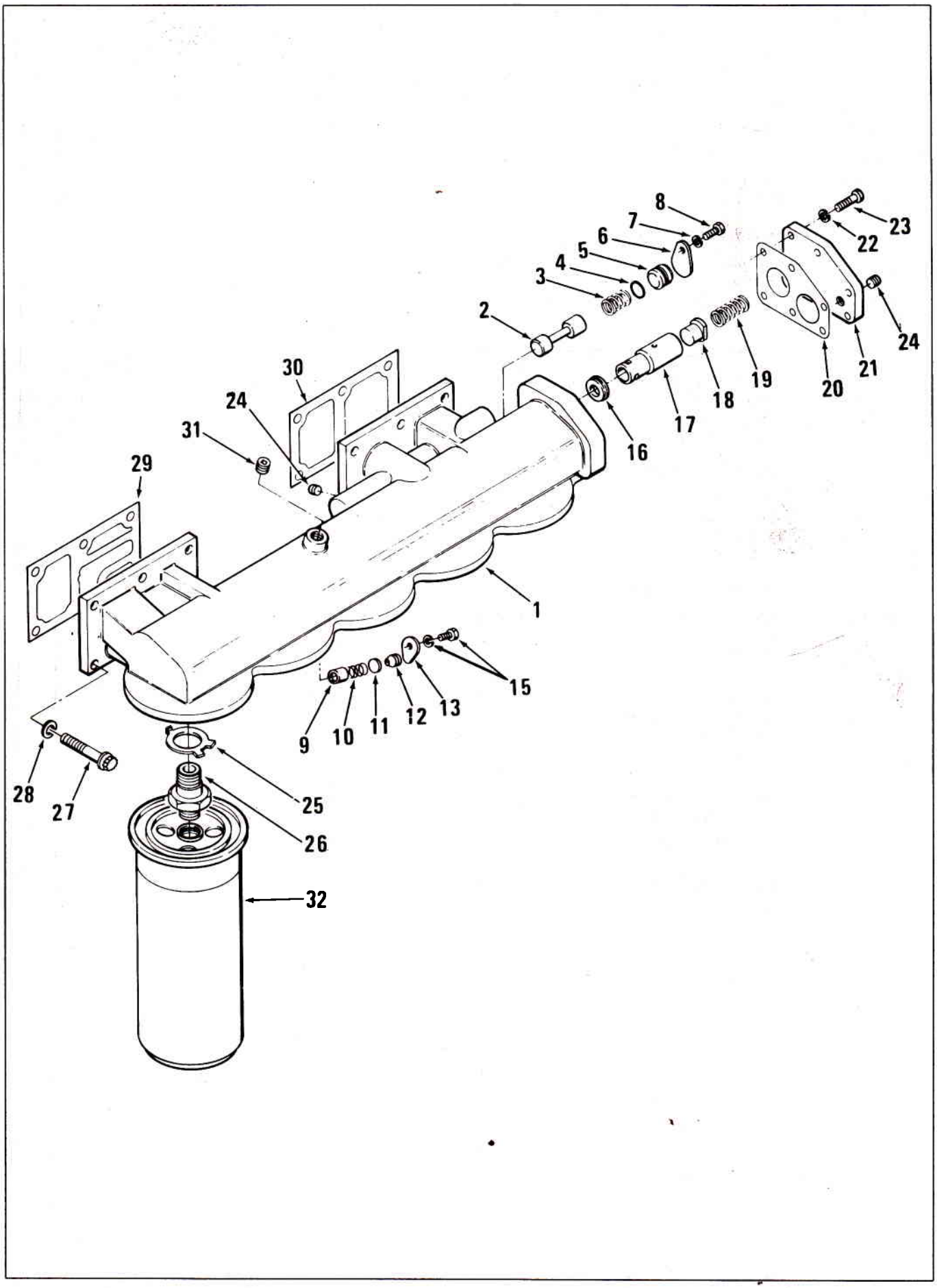
8
7
6
5
4
3
2
23
22
24
21
20
19
18
17
16
30
24
31
29
1
15
13
12
11
10
9
28
27
25
26
32

REF. NO.	PART NUMBER	PART NAME	NO. REQ'D.
		LUBRICATING OIL FILTER HEAD	
	3175337	Head, lub oil filter	1
	3005607	Assembly, pressure regulator valve	1
2	3000918	Plunger, regulator valve	1
3	205659	Spring, regulator valve	1
4	145529	O-ring	1
5	3000911	Cover, pressure regulator	1
6	170664	Washer, plain	1
7	S-606-A	Washer, lock	1
8	191772	Capscrew	1
	3005609	Assembly, piston cooling valve	1
9	205348	Plunger, piston cooling	1
10	205349	Spring	1
11	70842	O-ring	1
12	205350	Stop, pressure regulator	1
13	3000915	Washer, retaining	1
15	3022589	Capscrew & washer assembly	1
	3005610	Assembly, lub-filter by-pass valve	1
16	3000917	Seat, by-pass	1
17	205666	Body, by-pass valve	1
18	3021618	Plunger	1
19	205659	Spring	1
	3175338	Assembly, lub filter head (3000912)	1
X 20	3000910	Gasket, lub filter end cover	1
21	3000909	Cover, lub filter end	1
28	S-606-A	Washer, lock	6
23	S-103-D	Capscrew	6
24	S-911-B	Plug, pipe	2
25	3001483	Lockplate	5
26	3200308	Adapter, filter head (spin-on)	5
31	S-910-B	Plug, pipe	1
		MOUNTING PARTS	
27	191772	Capscrew	12
28	S-606-A	Washer, lock	12
29	3011649	Gasket, filter head to block	1
30	3011650	Gasket, filter head to block	1
		SPIN-ON LUBRICATING OIL FILTER	
32	299670	Filter, spin-on	5

PARTS INDENTED ARE INCLUDED IN THE PART UNDER WHICH THEY ARE INDENTED

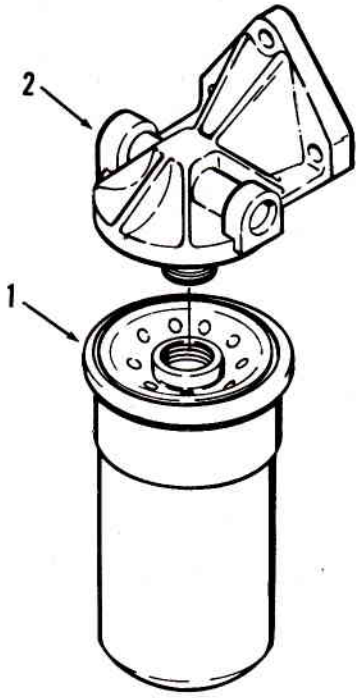

REF. NO.	PART NUMBER	PART NAME	NO. REQ'D.	REF. NO.	PART NUMBER	PART NAME	NO. REQ'D.
		LUBRICATING OIL BYPASS FILTER					
1	3304232	Filter, Lub Oil Bypass	2				
2	3304173	Head, Lub Oil Bypass	2				

PARTS INDENTED ARE INCLUDED IN THE PART UNDER WHICH THEY ARE INDENTED

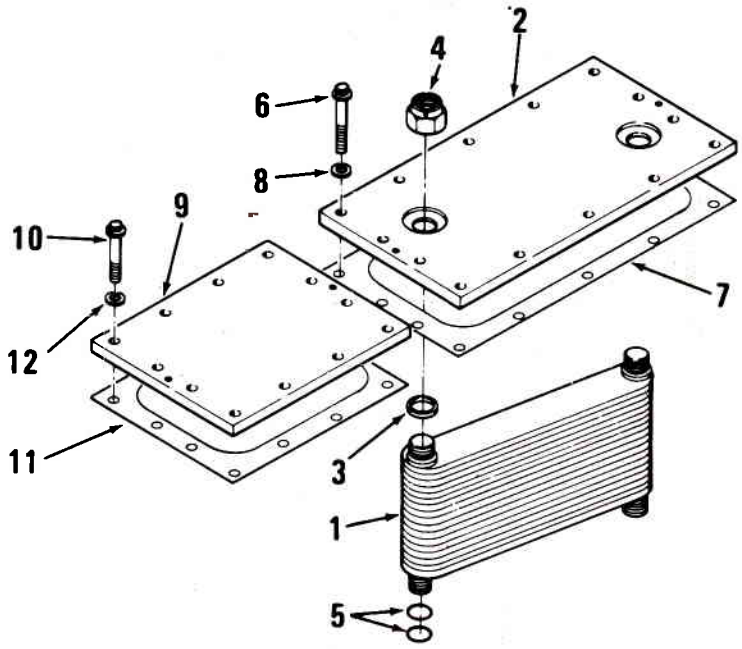

REF. NO.	PART NUMBER	PART NAME	NO. REQ'D.	REF. NO.	PART NUMBER	PART NAME	NO. REQ'D.
		LUBRICATING OIL COOLER					
1	205615	Element, lub oil cooler	4				
2	3009322	Cover, rear water header	4				
3	206021	Gasket, oil cooler	8				
4	3002126	Nut, self-locking	8				
5	178937	O-ring, cooler element	16				
		MOUNTING PARTS					
6	S-103-D	Capscrew, rear water-header cover	56				
7	3009324	Gasket, rear water header cover	4				
8	S-604	Washer, lock	56				
		WATER HEADER COVER FRONT					
9	3009321	Cover, front water header	1				
		MOUNTING PARTS					
10	S-103-D	Capscrew, front water header cover	12				
11	3009323	Gasket, front water header cover	1				
12	S-604	Washer, lock	12				

PARTS INDENTED ARE INCLUDED IN THE PART UNDER WHICH THEY ARE INDENTED

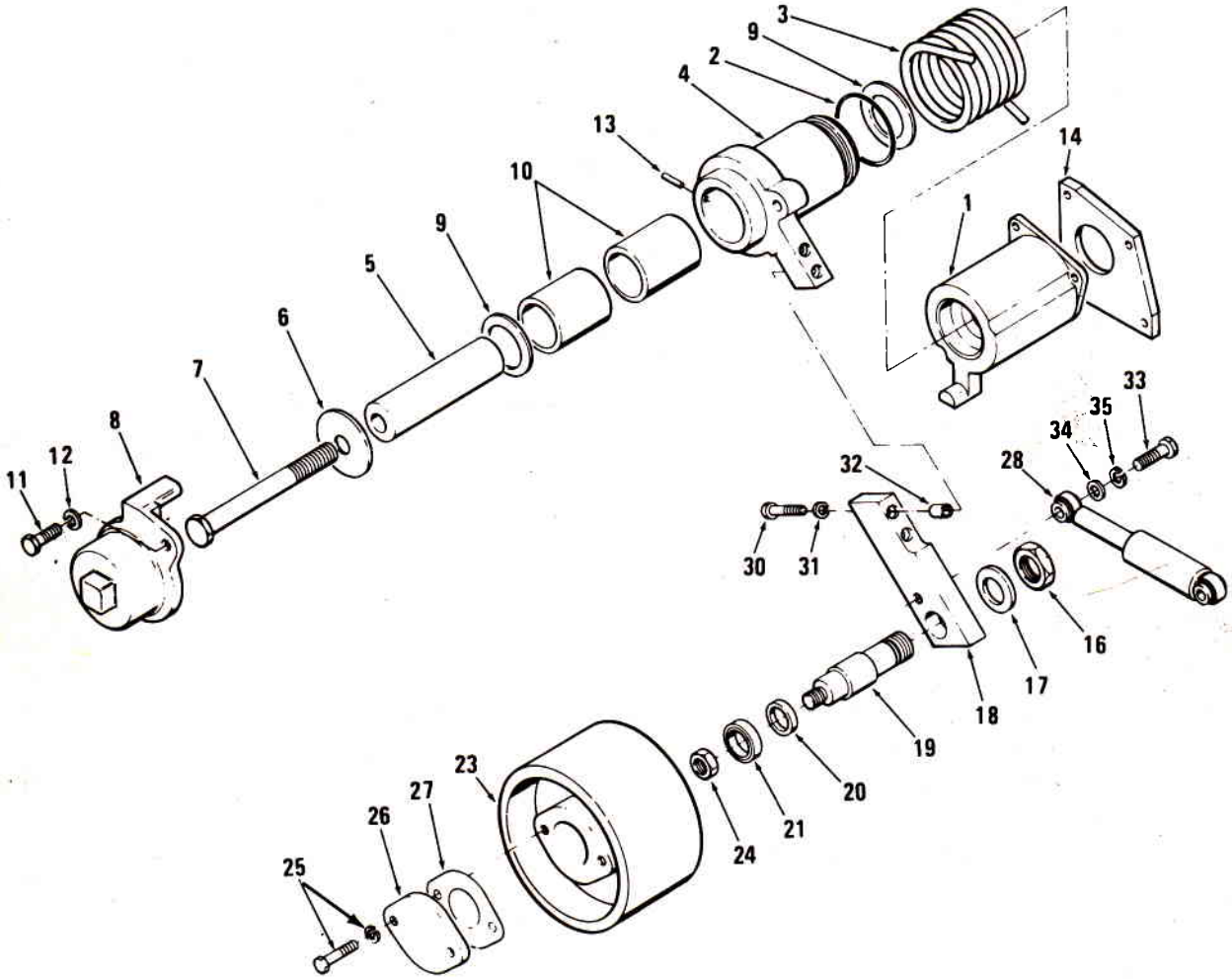
3
9
2
4
13
10
9
5
6
7
8
12
11
14
1
33
35
34
28
32
30
31
16
17
18
19
20
21
24
23
27
26
25

REF. NO.	PART NUMBER	PART NAME	NO. REQ'D.
		IDLER ASSEMBLY	
	3015461	Assembly, pivot arm	1
1	3023180	Support, pivot shaft	1
2	145581	O-ring	1
3	3019415	Spring, torsion	1
4	3175668	Arm, fan idler pivot	1
5	3009475	Shaft, pivot arm	1
6	127454	Washer, flat	1
7	S-110-B	Capscrew	1
8	3023499	Cap, pivot arm	1
9	3009774	Washer, thrust	2
10	3009477	Bushing, pivot arm shaft	2
11	185804	Capscrew	1
12	S-610	Washer, lock	1
13	68171	Pin, roll	2
		MOUNTING PARTS "A" (To Front Gear Cover)	
14	3009479	Adapter, pivot arm (Low Mount Fan)	1
	103009	Capscrew	1
	S-167-B	Capscrew	2
	S-153	Capscrew	1
	3019573	Capscrew, captive	1
	S-610	Washer, lock	3
		FAN IDLER	
	3009480	Assembly, fan idler arm	1
16	S-213-A	Nut, hexagon jam	1
17	S-658	Washer, plain	1
18	3009482	Arm, fan idler	1
19	3009481	Shaft, fan idler	1
20	3003353	Seal, oil	1
21	3003354	Assembly, bearing	1
23	3009483	Pulley, fan idler	1
24	3004057	Locknut, prevailing torque	1
25	3021470	Capscrew, captive	1
26	207603	Cover	1
27	205656	Gasket	1
		MOUNTING PARTS (To 3175668 Pivot Arm)	
30	S-120	Capscrew	2
31	S-604	Washer, lock	2
32	3002993	Dowel, ring	2
		SHOCK ABSORBER	
28	3008018	Absorber, shock	1
		MOUNTING PARTS (To 3009482 for Pivot Arm)	
33	S-162-A	Capscrew	1
34	S-622	Washer, plain	1
35	S-610	Washer, lock	1

REF. NO.	PART NUMBER	PART NAME	NO. REQ'D.
		MOUNTING PARTS "B" (Shock Absorber to Fan Idler Assembly) (For Low Mount Fan)	
	66747	Spacer	1
	S-121-B	Capscrew	1
	S-622	Washer, plain	1
	S-610	Washer, lock	1

PARTS INDENTED ARE INCLUDED IN THE PART UNDER WHICH THEY ARE INDENTED

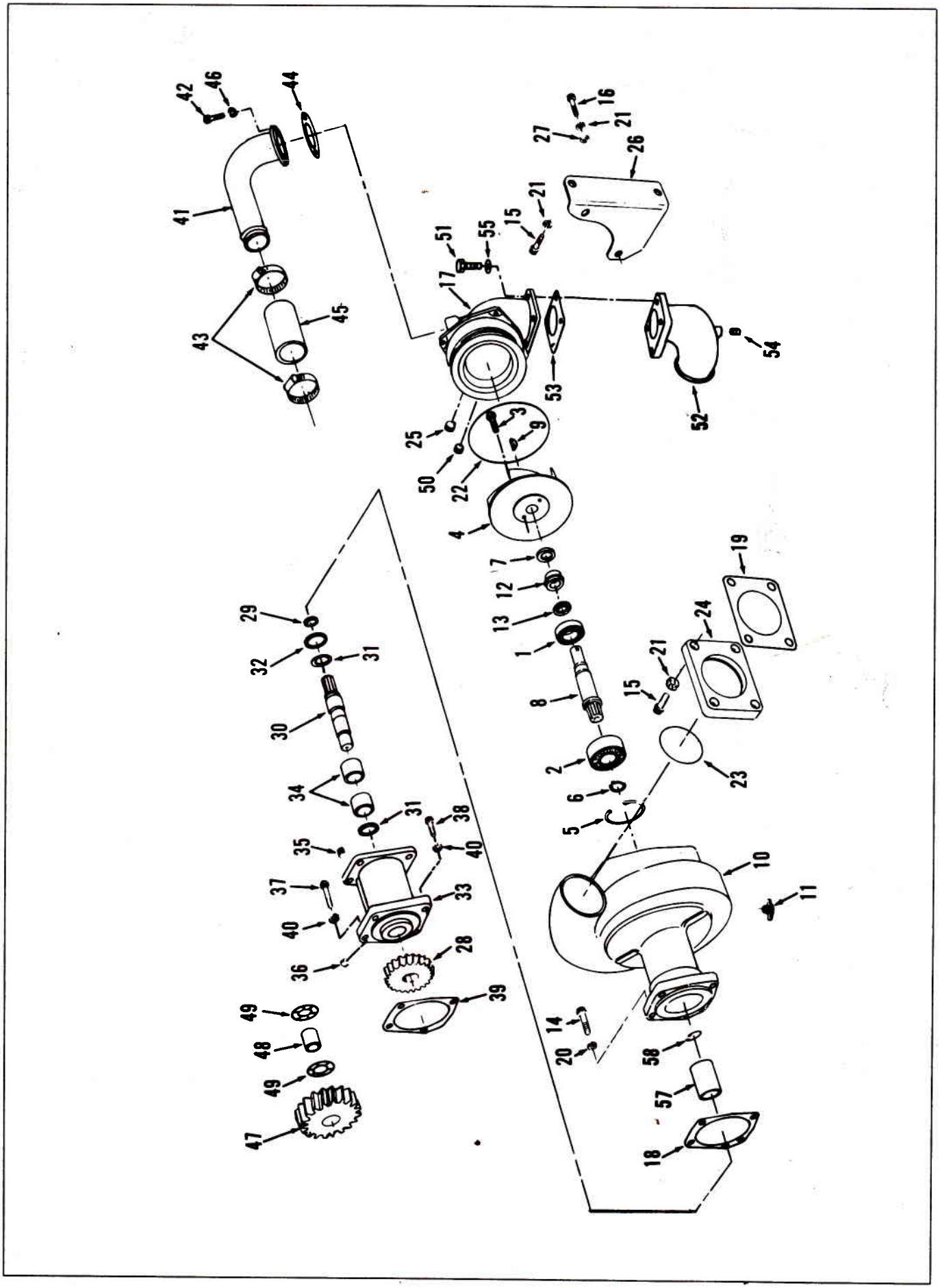
42
46
44
41
43
45
16
21
27
26
21
15
51
55
17
53
54
52
25
3
9
50
22
4
7
12
13
1
8
2
6
5
10
11
19
24
21
15
23
29
32
31
30
34
31
38
35
40
37
33
40
36
28
39
49
48
49
47
14
20
58
57
18

REF. NO.	PART NUMBER	PART NAME	NO. REQ'D.
		WATER PUMP	
	3002109	Pump, water	1
1	S-16054	Bearing, ball	1
2	S-16067	Bearing, ball	1
3	165006	Capscrew	1
4	3002106	Impeller, water pump	1
9	3175262	Key, water pump drive	1
5	70183	Ring, retaining	1
6	3175573	Ring, retaining	1
7	3004870	Seat, water pump	1
8	3175527	Shaft, water pump	1
10	3002107	Body, water pump	1
11	S-962-E	Cock, drain	1
12	206198	Seal, oil	1
13	3004869	Seal, water pump	1
57	206195	Coupling, splined	1
	3175570	Spacer, bearing	1
58	206196	Wire, snap	1
		MOUNTING PARTS	
14	103009	Capscrew	4
15	199919	Capscrew	6
16	191772	Capscrew	4
17	3002108	Connection, water pump inlet	1
X 18	206193	Gasket, water pump	1
X 19	206455	Gasket, water pump adapter	1
20	135783	Lockwasher	4
21	S-604	Lockwasher	8
22	206457	O-ring connection	1
23	3007512	O-ring, plate	1
24	206454	Plate, water pump adapter	1
25	3008468	Plug, pipe	1
50	S-907-A	Plug, pipe	1
26	3175857	Support, water pump	1
27	S-602	Washer, plain	4
		WATER INLET	
51	191772	Capscrew	4
52	207538	Connection, water inlet	1
X 53	207540	Gasket	1
54	3008470	Plug, pipe	1
55	S-606-A	Lockwasher	4
		WATER PUMP DRIVE SUPPORT	
	3024194	Support, water pump drive	1
28	207251	Gear, water pump drive	1
29	205166	Ring, retaining (beveled)	1
30	3175222	Shaft, water pump drive (206417)	1
	68193	Plug, pipe	1
31	3175253	Washer, thrust	2
32	205168	Washer, clamping	1
33	3024195	Support and bushing (3175234)	1
34	205156	Bushing, support	2
35	206742	Plug, expansion	1
36	70295	Plug, pipe	1

REF. NO.	PART NUMBER	PART NAME	NO. REQ'D.
		MOUNTING PARTS	
37	S-162-A	Capscrew	3
38	103009	Capscrew	1
X 39	206416	Gasket, water pump support	1
40	135783	Lockwasher	4
		THERMOSTAT BY-PASS TUBE	
41	3006481	Tube, thermostat by-pass assembly	1
		MOUNTING PARTS	
43	43828-E	Clamp	2
42	205354	Capscrew	2
X 44	206460	Gasket, tube	1
46	S-606-A	Lockwasher	2
45	67369-C	Hose	
		WATER PUMP IDLER GEAR	
47	3004682	Gear, idler water pump assembly (3004593)	1
48	3004686	Bushing, idler gear	1
49	130083	Bearing, thrust	2

PARTS INDENTED ARE INCLUDED IN THE PART UNDER WHICH THEY ARE INDENTED

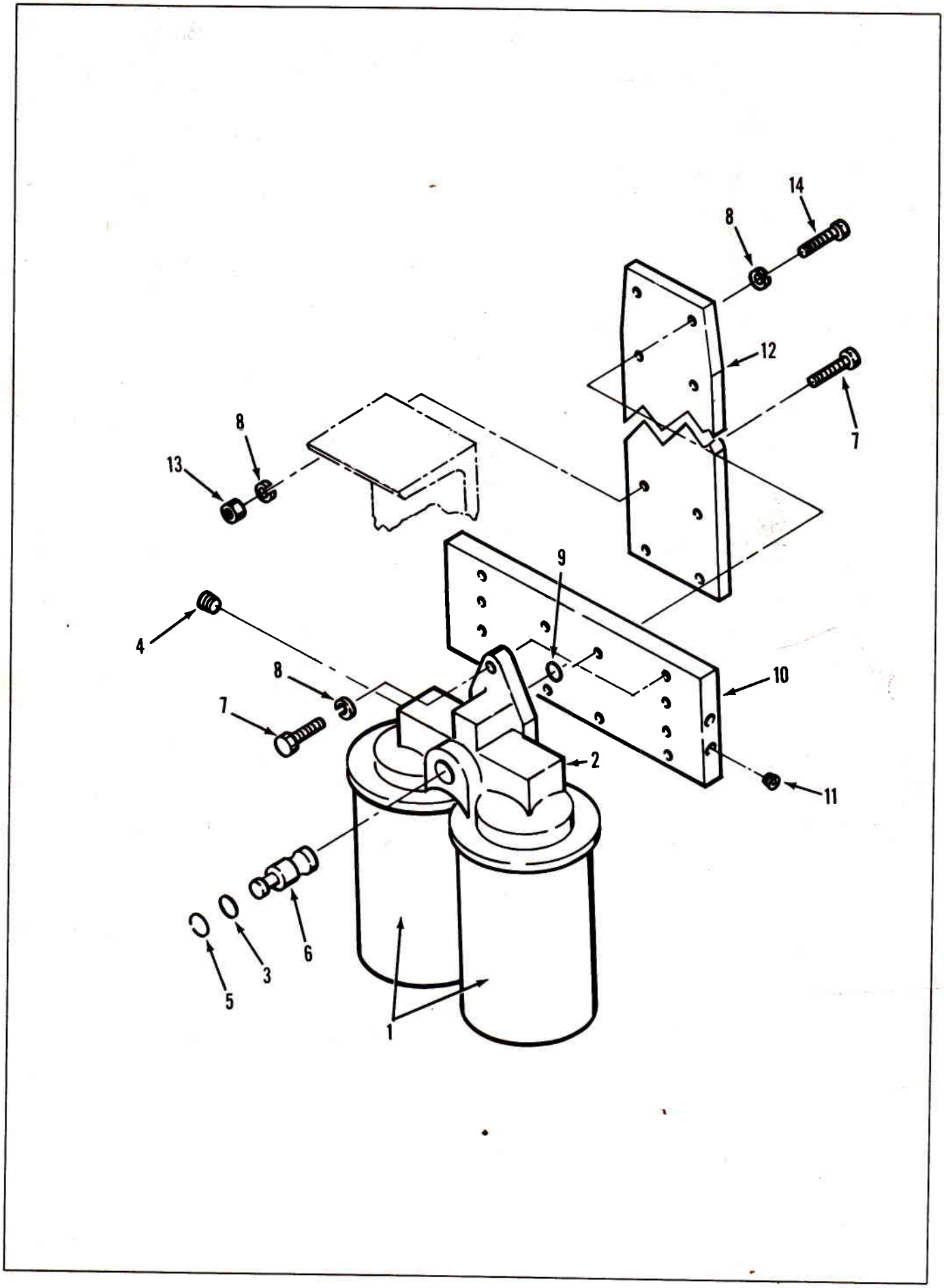
14
8
12
7
8
13
9
4
8
10
7
2
11
6
3
5
1

REF. NO.	PART NUMBER	PART NAME	NO. REQ'D.	REF. NO.	PART NUMBER	PART NAME	NO. REQ'D.
		WATER FILTER					
1	3305370	Element, water filter	4				
		WATER FILTER HEAD					
	3175452	Assembly, water filter head	2				
	3175453	Assembly, water filter head	2				
	3175768	Adapter, filter	2				
2	3175817	Head, water filter	2				
3	206449	O-ring	2				
4	3002158	Plug, pipe	4				
5	S-16240	Ring, snap	2				
6	206448	Valve, plunger	2				
7	205276	Capscrew	8				
8	S-606-A	Lockwasher	10				
9	70861	O-ring	4				
10	3004845	Manifold, water filter	1				
11	S-910-B	Plug, pipe	2				
12	3003470	Plate, water filter	1				
13	S-223	Nut	4				
14	S-103-D	Capscrew	4				
		WATER FILTER HOSE					
	AS0601200SS	Hose	1				
	AS0601800SS	Hose	1				
	S-925-E	Bushing	2				
	S-1039-A	Connector, male	1				
	S-1040-A	Elbow, male adapter	2				
	144378	Elbow, male adapter	1				

PARTS INDENTED ARE INCLUDED IN THE PART UNDER WHICH THEY ARE INDENTED

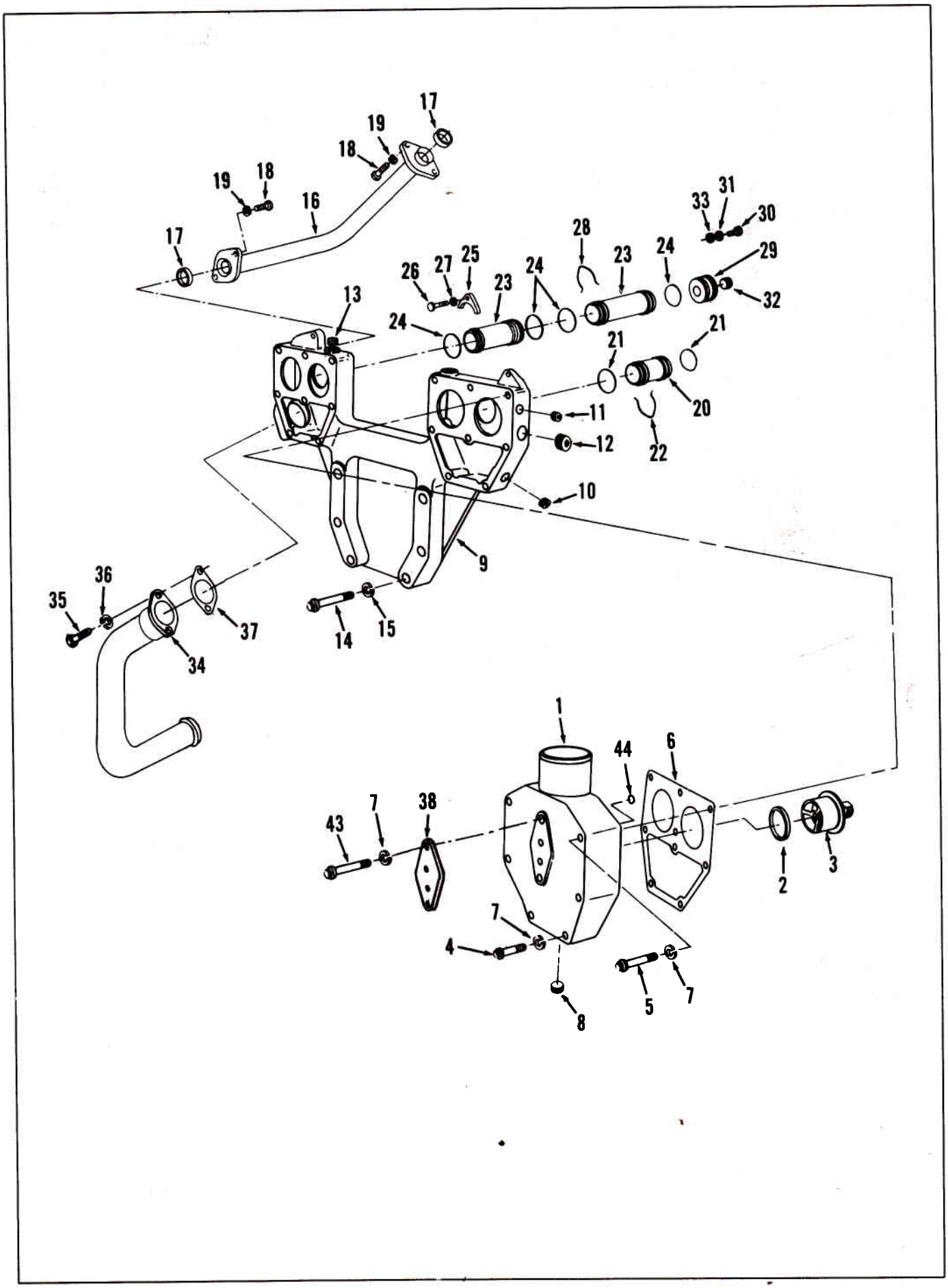
17
19
18
19
18
16
17
33
31
30
28
29
26
27
25
23
24
23
24
32
13
24
21
21
20
11
12
22
10
9
36
35
37
34
14
15
1
44
6
43
7
38
2
3
7
4
8
5
7

REF. NO.	PART NUMBER	PART NAME	NO. REQ'D.	REF. NO.	PART NUMBER	PART NAME	NO. REQ'D.
		THERMOSTAT HOUSING					
	AR-11501	Housing, thermostat	2				
1	206442	Housing, thermostat	2				
2	186780	Seal, thermostat	4				
3	3022299	Thermostat (180 deg.)	4				
		MOUNTING PARTS					
43	205921	Capscrew, twelve point	4				
4	205323	Capscrew	4				
5	205377	Capscrew	8				
X 6	206443	Gasket, thermostat housing	2				
7	S-606-A	Lockwasher	12				
8	3008469	Plug, pipe	2				
38	3003379	Plate, cover	2				
	70861	"O" ring	4				
		THERMOSTAT HOUSING SUPPORT					
9	3008715	Support, thermostat housing	1				
10	3013786	Plug, pipe	1				
11	3008466	Plug, pipe	2				
12	3008468	Plug, pipe	2				
13	3008469	Plug, pipe	2				
		MOUNTING PARTS					
14	205669	Capscrew, support	6				
15	S-611	Lockwasher	6				
		WATER TRANSFER TUBES					
16	3175543	Assembly, water transfer tube	2				
17	3008710	O-ring	2				
18	205354	Capscrew	8				
19	S-604	Lockwasher	8				
20	3002956	Tube, water transfer	1				
21	69760	O-ring	2				
22	205976	Ring, retainer	1				
23	206709	Tube, water transfer	11				
24	69760	O-ring	26				
25	3002957	Retainer	1				
26	207221	Capscrew	1				
27	103844	Lockwasher	1				
28	205976	Ring, retainer	10				
		WATER TRANSFER END PLUG					
29	3001375	Plug, water transfer	2				
30	S-109	Capscrew	2				
31	S-604	Lockwasher	2				
32	3008469	Plug, pipe	2				
33	62279	Spacer	2				
		THERMOSTAT BY-PASS TUBE					
34	3006480	Assembly, thermostat by-pass tube	1				
35	191772	Capscrew	2				
36	S-606-A	Lockwasher	2				
37	207515	Gasket	1				

PARTS INDENTED ARE INCLUDED IN THE PART UNDER WHICH THEY ARE INDENTED

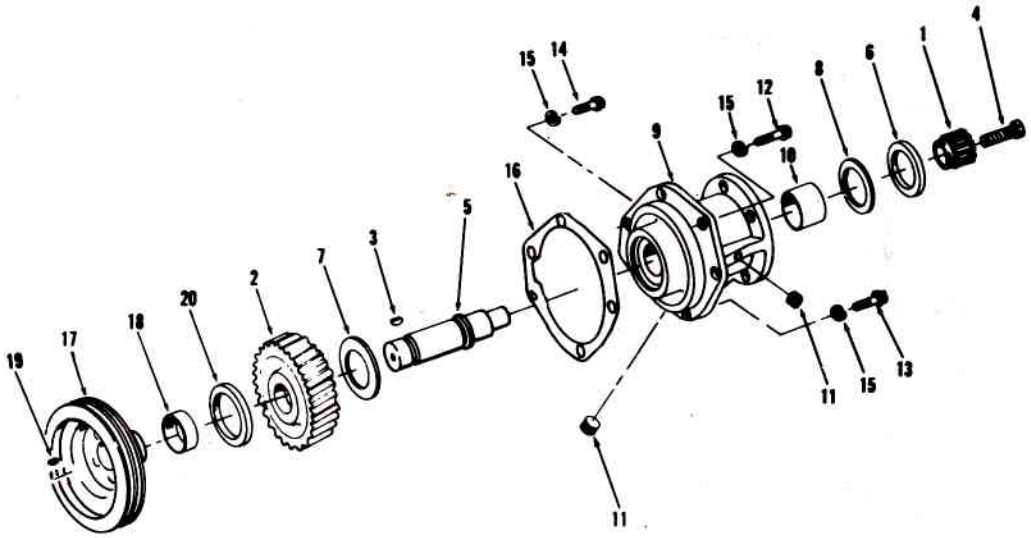

REF. NO.	PART NUMBER	PART NAME	NO. REQ'D.	REF. NO.	PART NUMBER	PART NAME	NO. REQ'D.
		ACCESSORY DRIVE					
	3010269	Drive, accessory	1				
4	3000173	Capscrew	1				
1	3000174	Coupling, half	1				
2	207253	Gear, compressor and fuel pump drive	1				
3	S-316	Key, shaft	2				
5	3000172	Shaft, accessory drive	1				
6	3014103	Washer, clamping	1				
	170664	Washer, plain	1				
7	116388	Washer, thrust	1				
8	116389	Washer, thrust	1				
9	AR-11496	Support and bushing (205530)	1				
10	116391	Bearing, accessory drive	1				
	3008468	Plug, pipe	1				
11	3002158	Plug, pipe	2				
		MOUNTING PARTS					
12	S-162-A	Capscrew	4				
13	103023	Capscrew	1				
14	103009	Capscrew	1				
15	135783	Washer, lock	6				
X 16	205598	Gasket, accessory drive support	1				
		ACCESSORY DRIVE PULLEY					
	AR-10621	Pulley, accessory drive assembly	1				
17	205411	Pulley, accessory drive	1				
18	190397	Sleeve, wear	1				
		MOUNTING PARTS					
19	S-316	Key, shaft	1				
20	3200287	Seal, key way	1				

PARTS INDENTED ARE INCLUDED IN THE PART UNDER WHICH THEY ARE INDENTED

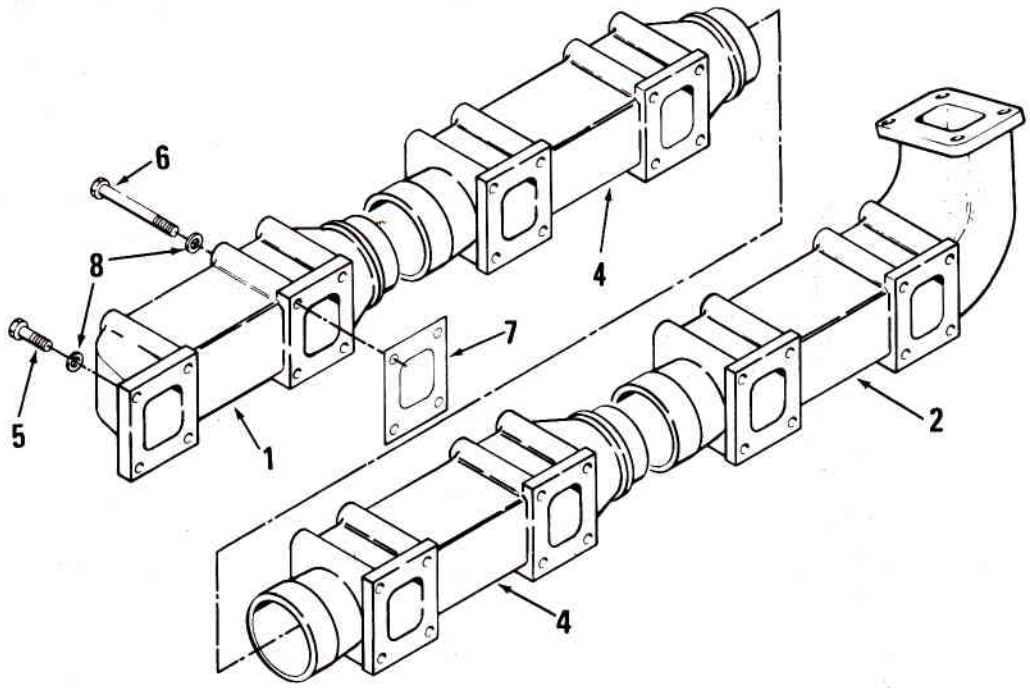

REF. NO.	PART NUMBER	PART NAME	NO. REQ'D.	REF. NO.	PART NUMBER	PART NAME	NO. REQ'D.
		EXHAUST MANIFOLD					
1	3016102	Manifold, exhaust	2				
2	3016100	Manifold, exhaust	2				
4	3009255	Manifold, exhaust (center)	4				
		NOTE: Exhaust manifolds may be used right bank or left bank.					
		MOUNTING PARTS					
5	3020180	Capscrew	4				
6	3020181	Capscrew	60				
7	205196	Gasket, exhaust manifold	16				
8	3020177	Washer, plain	64				

PARTS INDENTED ARE INCLUDED IN THE PART UNDER WHICH THEY ARE INDENTED

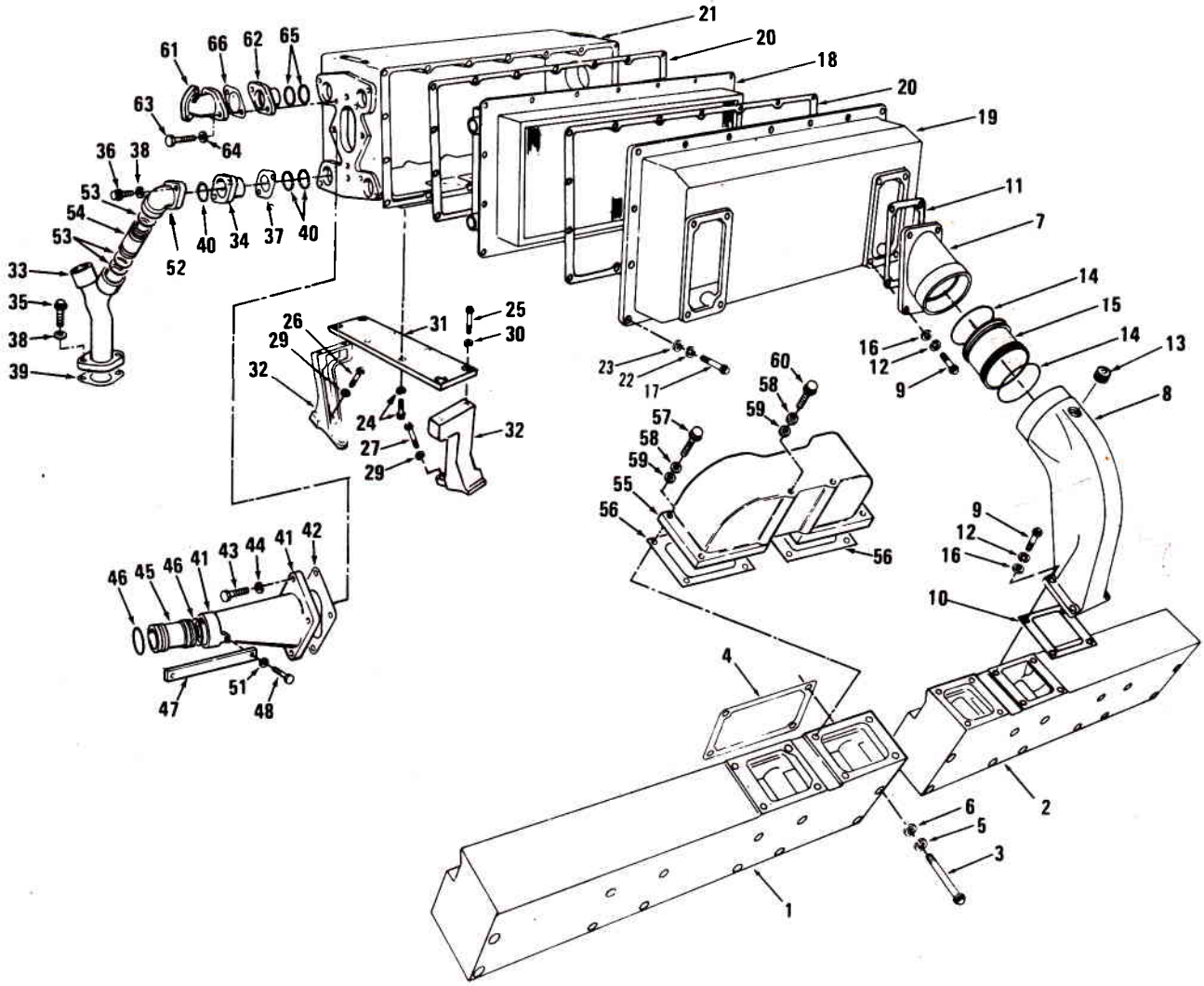
21
20
18
20
19
11
7
14
15
14
13
8
61
66
62
65
63
64
36
38
53
54
53
52
40
34
37
40
33
35
38
39
26
29
32
31
25
30
24
27
29
32
23
22
17
60
58
59
57
58
59
55
56
56
16
12
9
9
12
16
10
46
45
46
41
43
44
41
42
47
51
48
4
6
5
3
2
1

REF. NO.	PART NUMBER	PART NAME	NO. REQ'D.
		AIR INTAKE MANIFOLD	
1	3175681	Manifold, air intake (left bank rear and right bank front)	2
2	3175682	Manifold, air intake (right bank rear and left bank front)	2
		MOUNTING PARTS	
3	137869	Capscrew, air intake manifold	64
4	206277	Gasket, air intake manifold	16
5	S-604	Washer, lock	64
6	127362	Washer, plain	64
	3014304	Seal, rectangular ring	8
		AIR CROSSOVER CONNECTION AND HOUSING	
7	206434	Connection, air crossover	4
8	206438	Housing, air crossover	4
		MOUNTING PARTS	
9	199919	Capscrew, connection and housing	16
X 10	205633	Gasket, housing	4
X 11	206435	Gasket, connection	4
12	S-604	Washer, lock	16
13	S-910-B	Plug, pipe	4
14	3021421	O-ring, tube	8
	3023130	Seal, dust	1
15	206436	Tube, air	4
16	S-602	Washer, plain	16
		AFTERCOOLER	
17	205275	Capscrew	36
18	3008714	Core, aftercooler	2
19	3011296	Cover, aftercooler housing	2
20	3011580	Gasket, cover and element	4
21	3016123	Housing, aftercooler	1
22	S-604	Washer, lock	36
23	S-602	Washer, plain	36
		MOUNTING PARTS	
24	3012481	Capscrew, plate to cooler housing	8
25	103009	Capscrew, plate to support	8
26	205393	Capscrew, support to block	4
27	206041	Capscrew, support to block	4
29	S-608	Washer, lock, support to block	8
30	S-610	Washer, lock, plate to support	8
31	206437	Plate, aftercooler support	2
32	206667	Support, aftercooler housing	4
		MANIFOLD TO MANIFOLD CROSSOVER CONNECTION	
55	3013114	Connection, air intake	2
		MOUNTING PARTS	
56	205633	Gasket	4
57	199919	Capscrew	12
58	S-604	Washer, lock	16
59	S-602	Washer, plain	16
60	205314	Capscrew	4

REF. NO.	PART NUMBER	PART NAME	NO. REQ'D.
		WATER TRANSFER CONNECTION	
33	3175871	Connection, water transfer	1
		MOUNTING PARTS	
34	3175528	Adapter, water connection	2
35	205354	Capscrew, housing to water header	8
36	205275	Capscrew, housing to aftercooler	4
37	3014449	Gasket, water connection	4
38	S-604	Washer, lock	12
39	3175517	Gasket, connection to water header	1
40	3008710	Seal, adapter to cooler element	8
53	3175545	O-ring	6
54	3175267	Tube, water transfer	2
		AIR CROSSOVER CONNECTION (From Aftercooler To Turbo)	
41	3016121	Connection, air crossover	2
		MOUNTING PARTS	
42	3016122 X	Gasket, connection	2
43	S-103-D	Capscrew	8
44	S-604	Washer, lock	8
45	207214	Tube, air crossover	2
46	207236	O-ring	4
47	3016124	Strap, turbo retension	4
46	S-115	Capscrew	8
	3000222	Washer, spring	8
	3000223	Spacer	8
51	S-602	Washer, plain	8
		WATER OUTLET CONNECTION	
61	3019620	Connection, water outlet	2
62	3175528	Connection, adapter	2
63	205275	Capscrew, twelve point	4
64	S-604	Washer, lock	4
65	3003016	O-ring	2
66	3175517	Gasket, flange	2
	3008710	Seal, rectangular ring	2
	S-910-B	Plug, pipe	2
		WATER INLET CONNECTION	
52	3019621	Connection, water inlet	2
		MOUNTING PARTS	
	S-137	Capscrew	4
	S-604	Washer, lock	6
	43463-A	O-ring	6
	191772	Capscrew	2
	3003016	O-ring	2
	3008710	Seal, rectangular ring	2

PARTS INDENTED ARE INCLUDED IN THE PART UNDER WHICH THEY ARE INDENTED

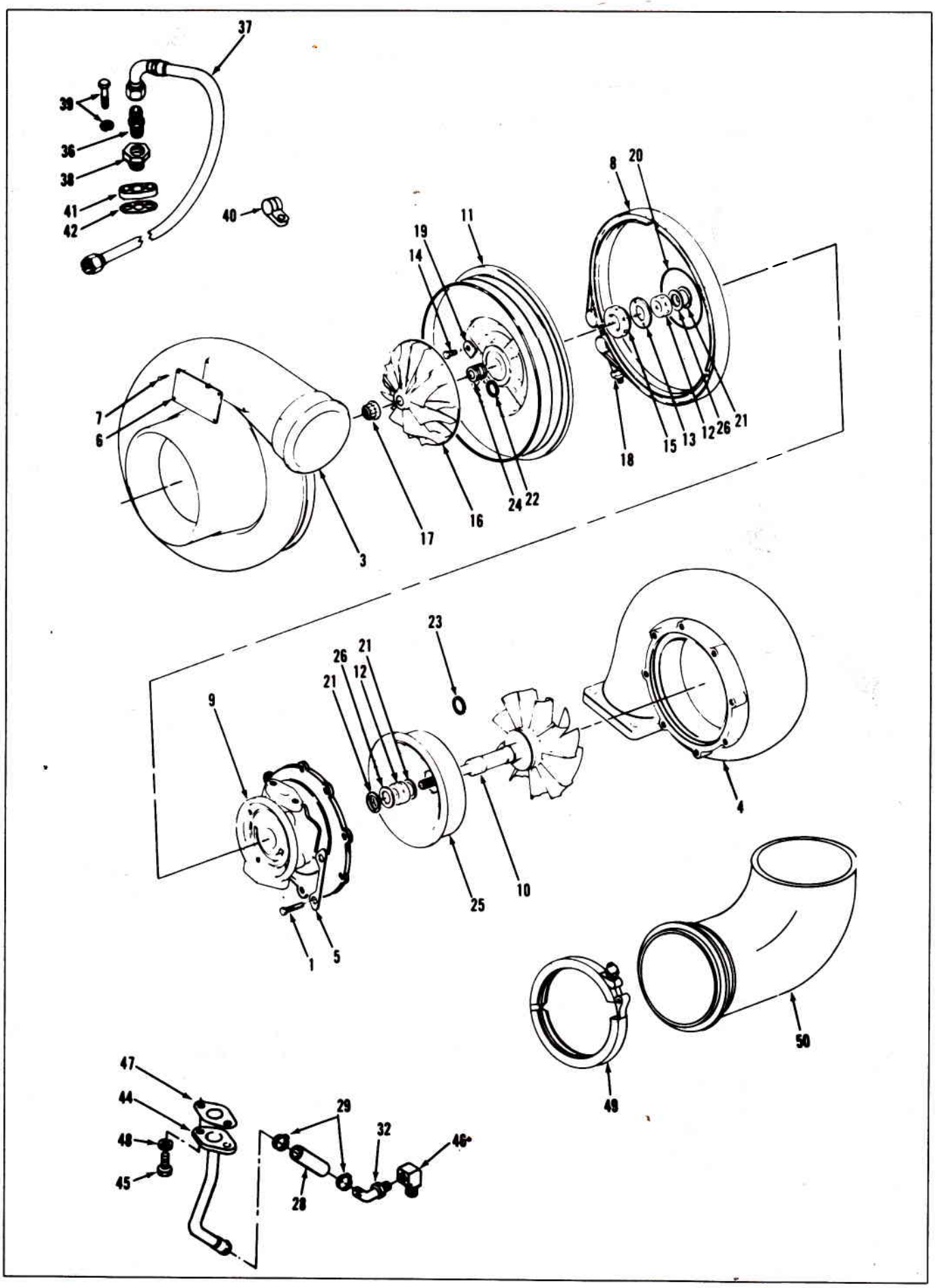
37
39
36
38
41
42
40
8
20
11
19
14
7
6
3
17
16
24
22
18
15
13
12
26
21
23
26
21
12
21
9
25
10
4
1
5
50
49
47
44
48
45
29
32
46
28

REF. NO.	PART NUMBER	PART NAME	NO. REQ'D.
		TURBOCHARGER T18-A	
	3016303	Turbocharger	1
1	3016315	Bolt, turbine housing	8
3	3026252	Housing, compressor	1
4	3016312	Housing, turbine	1
5	202872	Lockplate, turbine housing	4
6	207433	Nameplate	1
7	207434	Screw, nameplate	4
8	202868	Vee band	1
23	207431	Ring, piston	2
18	207432	Locknut, vee band	1
	3017210	Housing, assembly, rotating center	1
9	3016314	Assembly, center housing	1
10	3026256	Assembly, wheel and shaft	1
11	3004583	Backplate	1
12	207425	Bearing	2
13	202856	Bearing, inboard thrust	1
14	3004581	Bolt	4
15	3009198	Collar, thrust	1
16	3026253	Impeller	1
17	3009199	Locknut	1
20	202859	O-ring	1
21	202853	Ring, retaining	3
22	202860	Ring, piston	1
24	3009197	Spacer, thrust	1
25	202852	Shroud, wheel	1
26	202855	Washer	2
	3004582	Hardwasher	4
		MOUNTING PARTS	
	3016181	Capscrew	8
	206576	Gasket, turbo to exhaust manifold	2
	3016182	Locknut	8
	3175807	Brace	4
	165005	Capscrew	8
	207236	"O" ring	2
	207542	Seal, dust	2
	207214	Tube, air crossover	2
	S-626	Washer, plain	8
		TURBOCHARGER OIL SUPPLY	
36	142427	Adapter	4
37	209962	Assembly, oil supply hose	2
38	S-955	Bushing, pipe	2
39	3012471	Capscrew and lockwasher	4
40	108722	Clamp	4
	206668	Elbow (45 deg.)	2
41	201017	Flange, turbocharger oil inlet	2
42	201049	Gasket, flange	2
	3014354	Adapter	1

REF. NO.	PART NUMBER	PART NAME	NO. REQ'D.
		TURBOCHARGER OIL DRAIN	
44	3016130	Assembly, oil return tube	2
45	S-112	Capscrew	4
46	S-1064	Elbow (90 deg.)	2
47	201048	Gasket, flange	2
48	S-604	Washer, lock	4
28	556150	Hose	2
29	556148	Clamp	4
32	3175219	Connection, oil drain	2
	3003206	Shield, heat	2
	S-602	Washer, plain	4
		TURBOCHARGER EXHAUST CONNECTION	
49	3016306	Clamp, vee band	2
50	3016309	Assembly, turbocharger exhaust connection	2

PARTS INDENTED ARE INCLUDED IN THE PART UNDER WHICH THEY ARE INDENTED

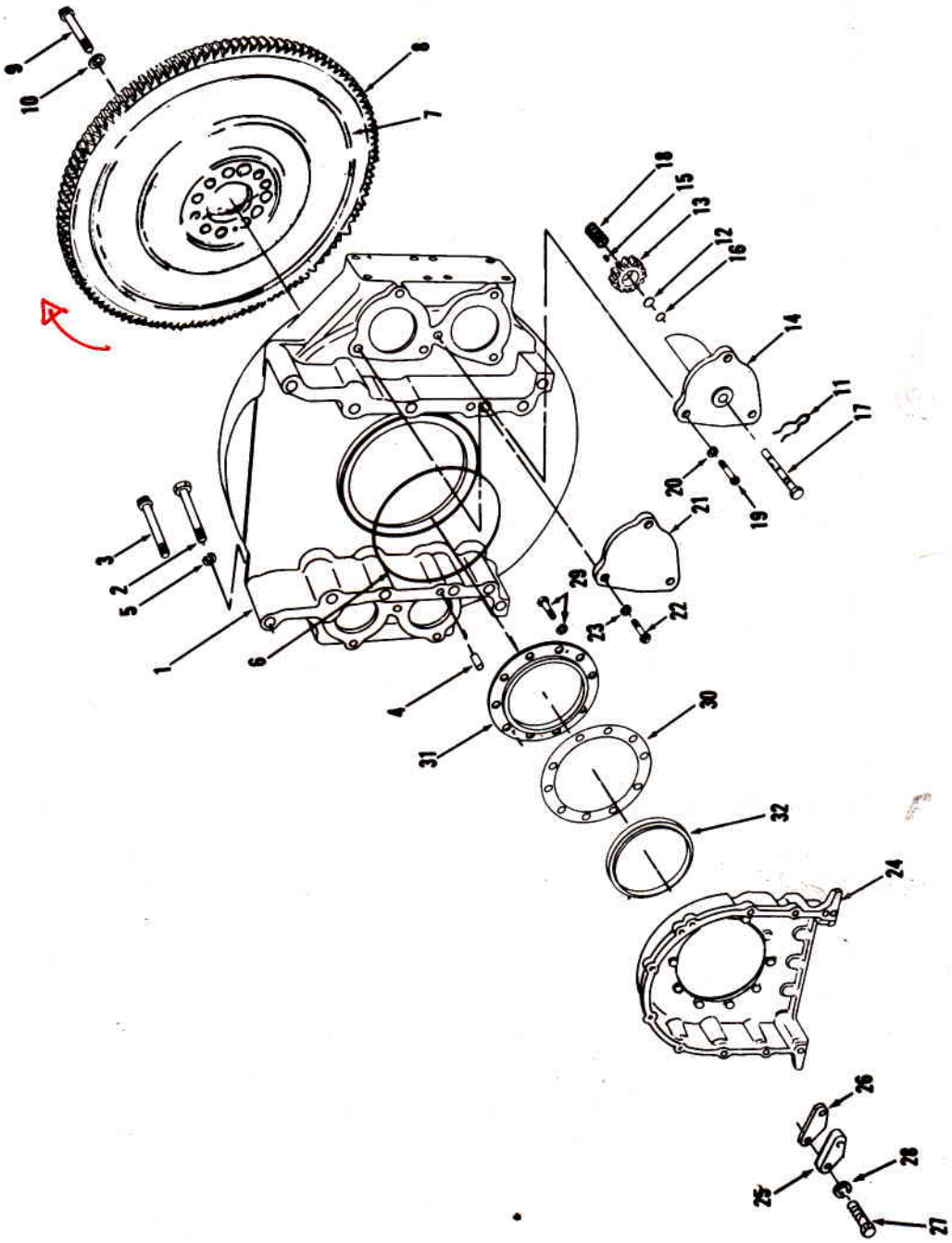
1
2
3
4
5
6
7
8
9
10
11
12
13
14
15
16
17
18
19
20
21
22
23
24
25
26
27
28
29
30
31
32

REF. NO.	PART NUMBER	PART NAME	NO. REQ'D.
		FLYWHEEL HOUSING	
1	3175246	Housing, flywheel	1
		MOUNTING PARTS	
2	S-150-A	Capscrew	10
3	205565	Capscrew	2
4	70662	Dowel	2
5	S-611	Lockwasher	12
6	207551	Seal, dust	1
		STARTER HOLE COVER	
21	62182	Cover, starter flange	1
22	S-181	Capscrew	3
23	S-603	Lockwasher	3
		ACCESS HOLE COVER	
	3010410	Cover, access hole	2
	S-167-A	Capscrew	2
	S-600	Lockwasher	2
		FLYWHEEL AND RING GEAR	
7	3012603	Flywheel and ring gear (3006189)	1
8	124507	Ring gear	1
		MOUNTING PARTS	
9	3023536	Capscrew	12
10	205059	Washer, plain	12
	131584	Pin, roll	1
		BARRING MECHANISM	
	AR-11490	Barring mechanism	1
11	169834	Clamp, external cotter	1
12	206090	E-ring, retaining	1
13	206091	Gear, barring device	1
14	206093	Housing, barring device	1
15	S-306	Key, lock	1
16	102827	O-ring	1
17	206089	Shaft, barring device	1
18	206092	Spring, barring device	1
		MOUNTING PARTS	
19	153581	Capscrew	3
20	S-603	Lockwasher	3

REF. NO.	PART NUMBER	PART NAME	NO. REQ'D.
		REAR GEAR DRIVE HOUSING	
24	3005937	Housing, gear	1
	103009	Capscrew	4
	106069	Capscrew	14
	148582	Dowel, pin	1
	69580	Dowel	1
	206421	Gasket, gear housing	1
	S-610	Lockwasher	18
		OIL COVER PLATE	
25	3005938	Plate, oil cover	1
26	3005939	Gasket, oil cover plate	1
27	103023	Capscrew	2
28	S-610	Lockwasher	2
		REAR OIL CRANKSHAFT SEAL	
29	3021470	Capscrew and lockwasher	10
30	205571	Gasket, seal retainer	1
31	207547	Retainer, rear oil seal	1
32	3016793	Seal, rear cover	1

PARTS INDENTED ARE INCLUDED IN THE PART UNDER WHICH THEY ARE INDENTED

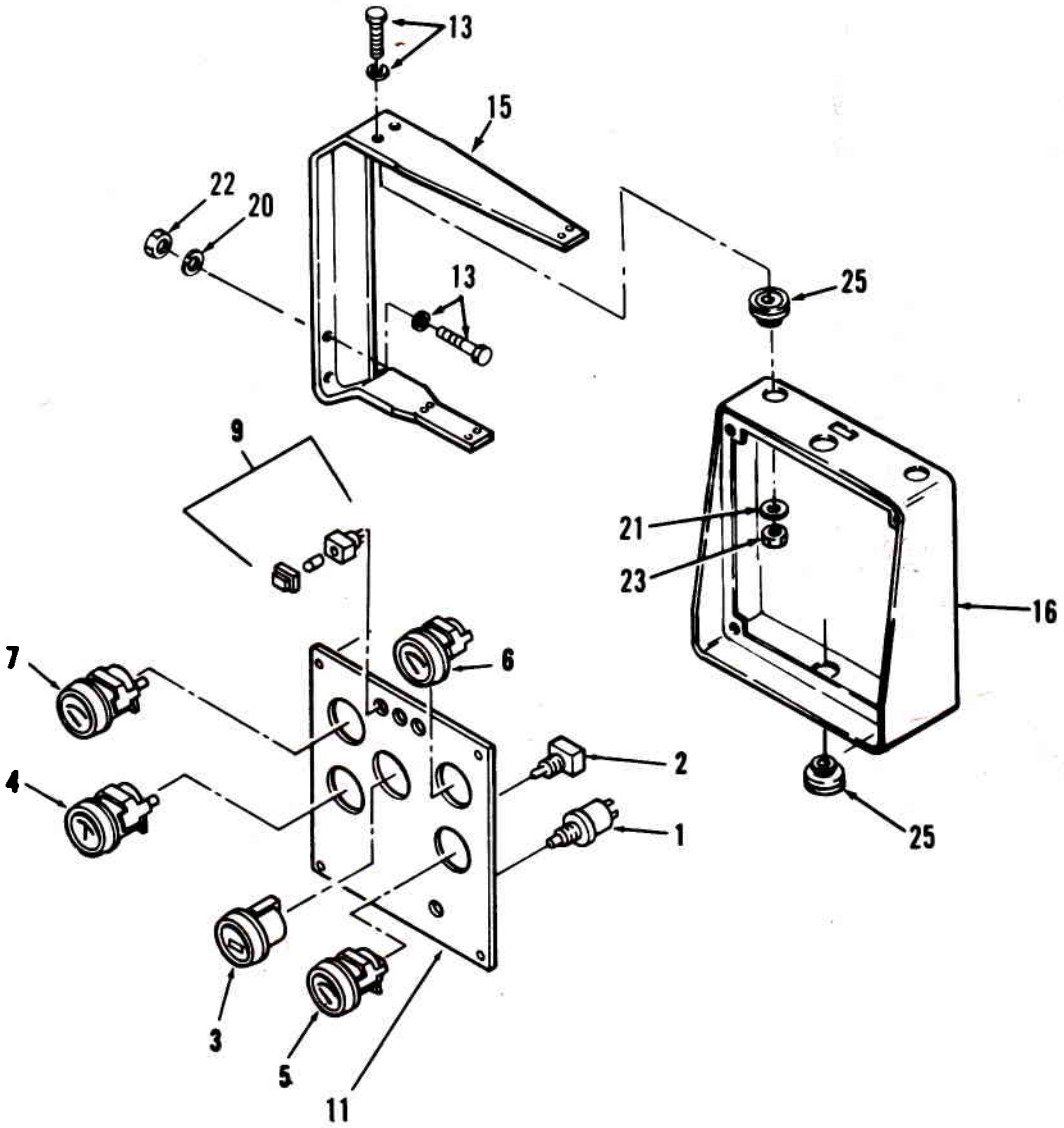
13
15
22
20
13
25
9
21
23
16
7
6
2
4
1
25
3
5
11

REF. NO.	PART NUMBER	PART NAME	NO. REQ'D.	REF. NO.	PART NUMBER	PART NAME	NO. REQ'D.
		INSTRUMENT PANEL					
	3015220	Assembly, engine instrument panel	1				
1	66501	Starting switch (push-button)	1				
2	102057	Starting switch (toggle)	1				
3	3015236	Hourmeter	1				
4	3015235	Voltmeter	1				
5	3015234	Gauge, water temperature	1				
	3015238	Transducer	2				
6	3015233	Gauge, oil temperature	1				
7	3015232	Gauge, oil pressure	1				
	3015237	Transducer	1				
9	3014664	Light assembly	3				
	3016852	Wiring harness (Basic instrument panel)	1				
11	3015087	Panel, engine instrument	1				
		INSTRUMENT CABINET					
16	3018486	Cabinet, instrument	1				
15	3021125	Bracket	1				
25	3021895	Isolator, vibration	3				
22	S-223	Nut	4				
23	S-224	Nut	3				
13	3012471	Capscrew and lockwasher	4				
24	3016086	Screw	4				
20	S-602	Washer, plain	4				
21	S-631	Washer, plain	3				
	S-156-B	Capscrew	3				
	S-103-D	Capscrew	5				
	206328	Capscrew, twelve point	1				
	S-604	Lockwasher	2				
	S-600	Lockwasher	3				
	3023294	Wiring harness	1				

PARTS INDENTED ARE INCLUDED IN THE PART UNDER WHICH THEY ARE INDENTED

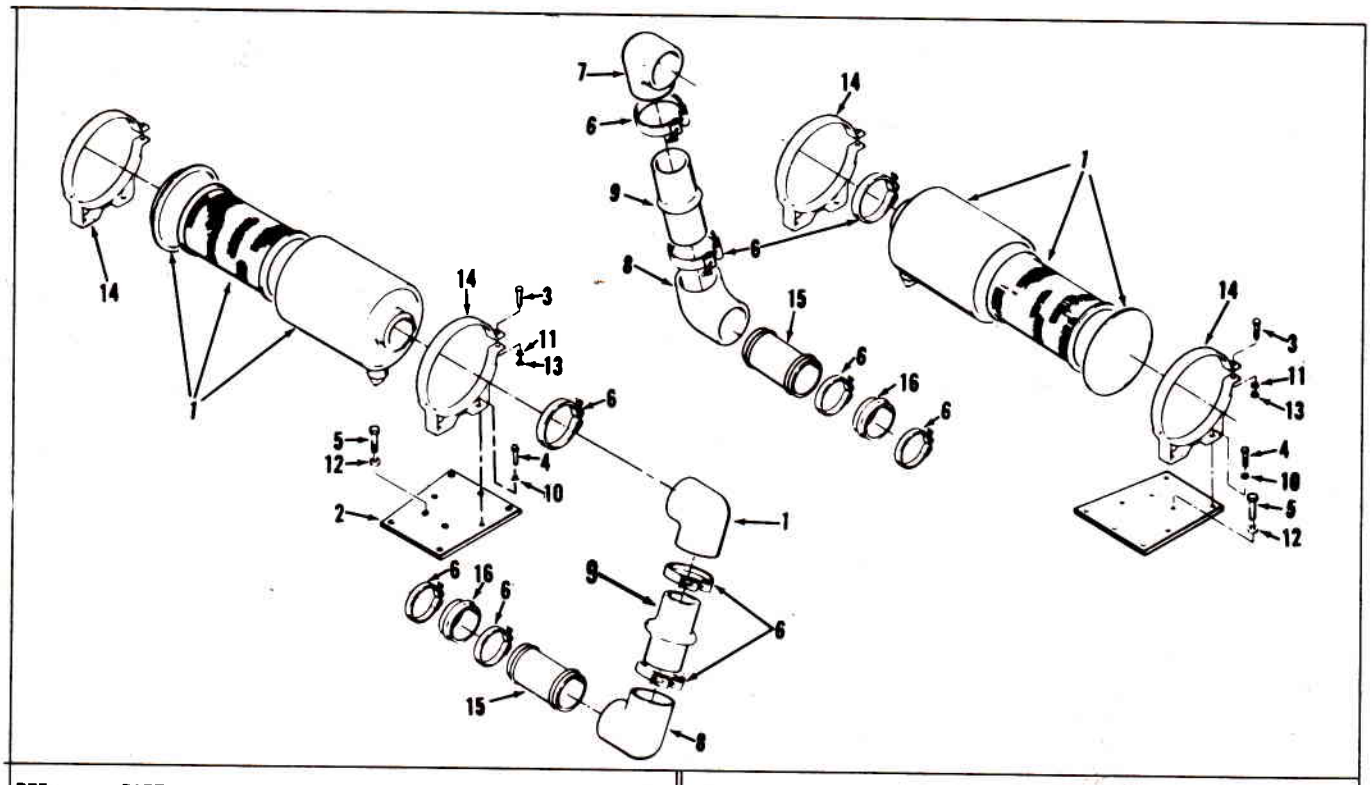

REF. NO.	PART NUMBER	PART NAME	NO. REQ'D.	REF. NO.	PART NUMBER	PART NAME	NO. REQ'D.
		AIR CLEANER					
1	.3017002	Air cleaner	2				
		MOUNTING PARTS					
2	3017004	Bracket	2				
3	S-119	Capscrew	4				
4	S-117	Capscrew	8				
5	103009	Capscrew	10				
6	125741	Clamp, T-bolt	4				
	140314	Clamp, hose T	6				
7	105314	Elbow, 90 deg	2				
8	3000308	Elbow, 90 deg	2				
9	103808	Hose	2				
10	S-604	Lockwasher	8				
11	S-605	Lockwasher	4				
12	S-610	Lockwasher	10				
13	S-221	Nut	4				
14	197221	Strap, cleaner	4				
15	3017006	Tube, air inlet	2				
	140313	Clamp, T-bolt	2				

PARTS INDENTED ARE INCLUDED IN THE PART UNDER WHICH THEY ARE INDENTED

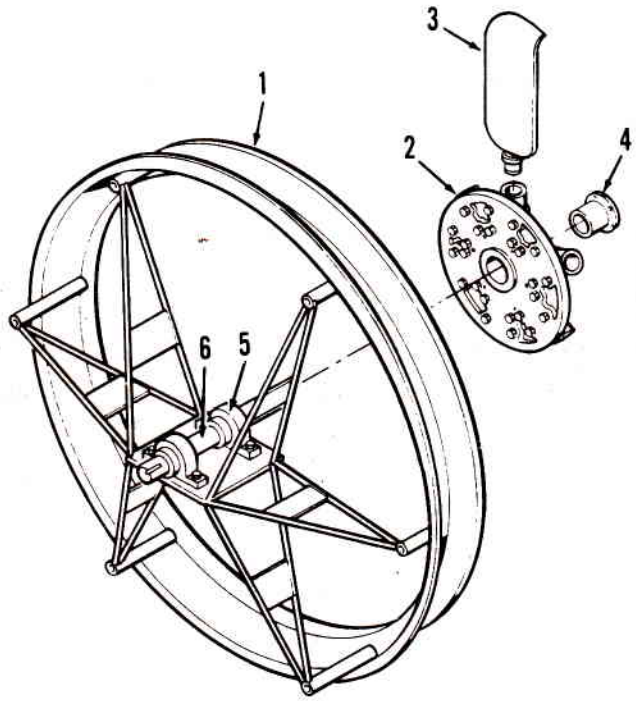

REF. NO.	PART NUMBER	PART NAME	NO. REQ'D.	REF. NO.	PART NUMBER	PART NAME	NO. REQ'D.
		FAN SHROUD					
	3007620	Assembly, fan shroud					
	3003967	Fan, shroud	1				
1	3003968	Shroud, fan support	1				
5	3003969	Bearing	2				
6	3003970	Shaft, fan drive	1				
	3010398	Assembly, fan (adjusting pitch)	1				
2	3007605	Assembly, fan hub	1				
3	3010397	Blade, fan (adjusting pitch)	6				
4	3003452	Bushing, fan hub	1				

PARTS INDENTED ARE INCLUDED IN THE PART UNDER WHICH THEY ARE INDENTED

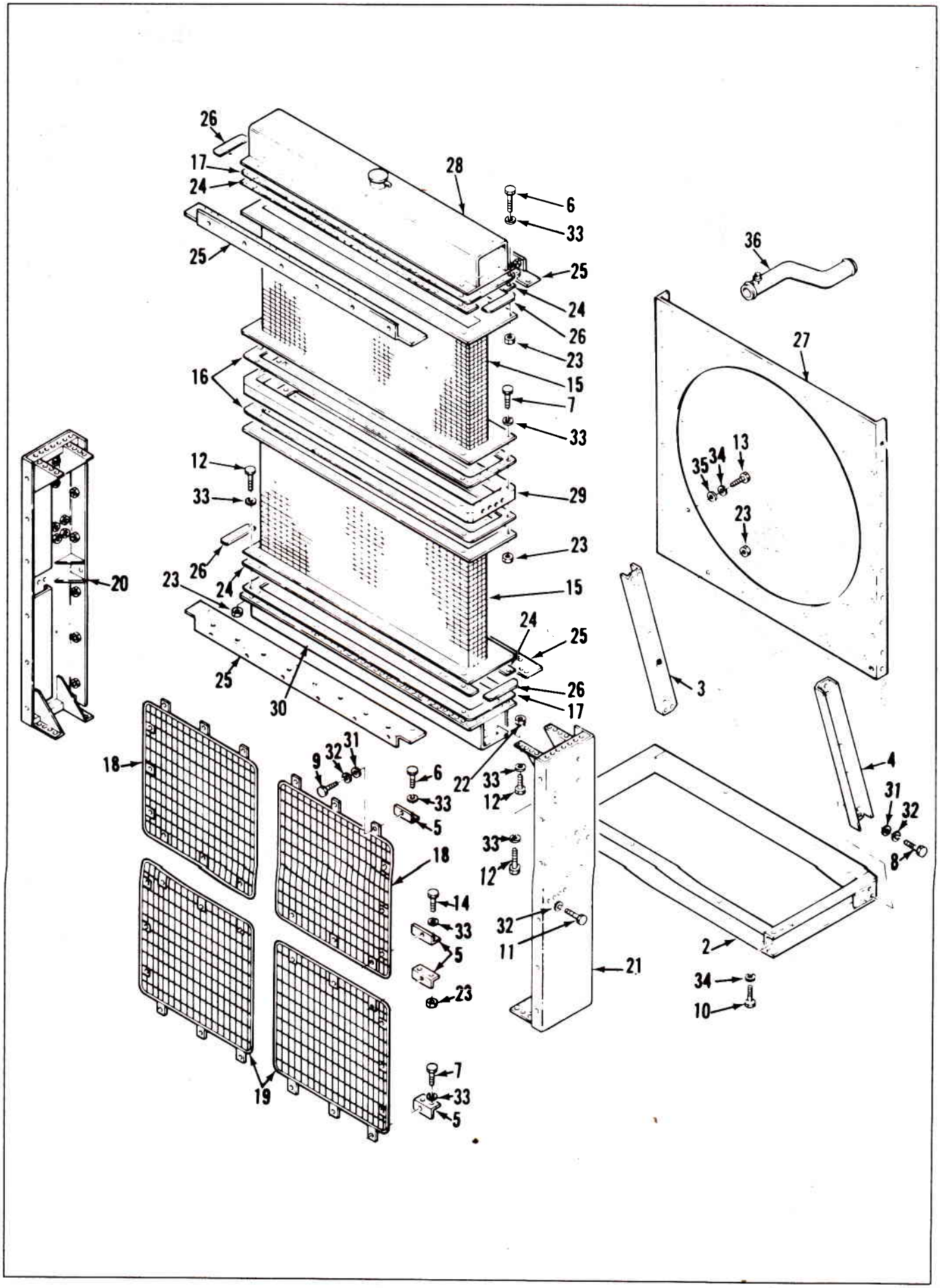
26
17
24
28
6
33
25
36
25
24
26
23
15
7
33
16
27
13
35
34
12
33
29
23
20
26
23
24
15
24
25
25
30
26
17
3
18
9
32
31
6
33
5
22
33
12
4
31
32
8
33
12
18
14
33
5
32
11
2
21
34
10
23
19
7
33
5

REF. NO.	PART NUMBER	PART NAME	NO. REQ'D.	REF. NO.	PART NUMBER	PART NAME	NO. REQ'D.
		RADIATOR AND FAN GUARD					
1	3020416	Radiator	1				
2	3003861	Base, radiator	1				
3	3003862	Brace, radiator L.S.	1				
4	3003863	Brace, radiator R.S.	1				
5	3003865	Bracket, grill	24				
6	S-102	Capscrew	62				
7	S-103	Capscrew	80				
8	S-109	Capscrew	40				
9	S-112	Capscrew	36				
10	S-113	Capscrew	6				
11	S-117	Capscrew	4				
12	S-119	Capscrew	86				
13	S-145	Capscrew	24				
14	65563	Capscrew	8				
15	3020415	Core and header	1				
16	3017139	Gasket, header	2				
17	3003854	Gasket, header	3				
18	3003864	Grill, front	2				
19	3008518	Grill, front	2				
20	3003858	Member, side	1				
21	3003859	Member, side	1				
22	S-200	Nut	6				
23	S-221	Nut	208				
24	3003855	Plate, core	6				
25	3003856	Plate, core	4				
26	3017135	Plate, core	4				
27	3003860	Plate, shroud	1				
28	3003847	Tank, top radiator	1				
29	3017136	Tank, center radiator	1				
30	3003849	Tank, bottom radiator	1				
31	S-602	Washer	40				
32	S-604	Washer	40				
33	S-605	Washer	236				
34	S-608	Washer	30				
35	S-670	Washer	24				
	3016191	Panel, side fan guard	2				
	3016192	Panel, rear fan guard R.B.	1				
	3016193	Panel, rear fan guard L.B.	1				
	214718*	Nut, weld	2				
	3003890	Support, fan guard frame	2				
	214718	Nut, weld	4				
36	3016209	Tube, water inlet assembly	1				
	3016208	Tube, water outlet assembly	2				
	3003885	Tube, radiator fill lower	1				
	3003909	Tube, radiator fill upper	1				

*Not sold separately. Available as part of assembly only.

PARTS INDENTED ARE INCLUDED IN THE PART UNDER WHICH THEY ARE INDENTED

REF. NO.	PART NUMBER	PART NAME	NO. REQ'D.
		STARTING MOTOR	
	3010125	Motor, starting (24 volt)	2
	3018924	Strap, braid	2
		MOUNTING PARTS	
	153581	Capscrew	3
	S-603	Lockwasher	3
		ALTERNATOR	
	3016627	Alternator (24 volt, 35 amp.)	1
	3014711	Pulley, alternator	1
		ALTERNATOR DRIVE PULLEY	
	3015546*	Pulley, alternator drive (3014710)	1
	190397	Sleeve, wear	1
		*Released for use with front cover mounted hydraulic pumps.	
		MOUNTING PARTS	
	3014712	Belt, alternator	1
	3003346	Bracket, alternator	1
	206041	Capscrew	1
	206401	Capscrew	2
	70111	Capscrew	1
	203760	Washer	3
	212738	Nut, flanged	1
	207509	Sleeve	2
	203310	Washer, adjustment link	3
	3025397	Link, alternator adjustment	1
	3025396	Link, lower adjustment	1
	205958	Link, upper adjustment	1
	S-253	Nut	1
	206202	Nut, jam	1
	205959	Screw, adjusting	1
		ELECTRICAL EQUIPMENT	
		Electrical equipment is not manufactured by the Cummins Engine Company, Inc. Complete service for electrical equipment may be obtained from the manufacturers: The Delco-Remy Company at Anderson, Indiana; The Leece-Neville Company at Cleveland, Ohio; or from their service station may be obtained from the manufacturer.	

REF. NO.	PART NUMBER	PART NAME	NO. REQ'D.
		MAGNETIC SWITCH	
	216537	Switch, magnetic	2
	3013904	Capscrew and lockwasher	2
	3015216	Bracket, magnetic switch	1
	S-258	Nut, hex	2
	S-691	Washer, plain	2
		VOLTAGE REGULATOR	
	3020010	Voltage regulator	1
		GASKET SETS	
	3015546	Engine set	1
	3015447	Cylinder head gasket set (For all 16 heads)	1
	3015239	Cylinder head gasket (One head only)	1
	BM-68356	Fuel pump gasket set (P.T.G. Standard governor)	1
	3010242	Fuel pump gasket set (P.T.G.-VS governor)	1

PARTS INDENTED ARE INCLUDED IN THE PART UNDER WHICH THEY ARE INDENTED

REF. NO.	PART NUMBER	PART NAME	NO. REQ'D.
		SAFETY CONTROLS (ENGINE)	
	194505	Water temperature safety control	1
	194504	Oil pressure safety control	1
		SPEED SWITCH (SYNCHRO-START)	
	3011573	Speed switch	1
	3011575	Sending unit	1
	3021147	Bracket	1
	3017976	Brace, instrument panel	1
	3023296	Wiring harness	1
		ENGINE WIRING	
	S-188-C	Capscrew	1
	178268	Cabinet, terminal block	1
	213229	Capacitor	1
	196891	Circuit breaker	1
	69504	Pan head screw	2
	137703	Connector, squeeze type	1
	S-600	Lockwasher	5
	S-692	Lockwasher	2
	S-643	Plain washer	1
	109993	Pan head screw	2
	S-105-C	Capscrew	4
	S-224	Nut, hex	4
	S-215-A	Nut, hex	1
	S-258	Nut, hex	1
	3026766	Block, terminal	1
	3026767	Marker, terminal	1
	194076	Wiring diagram	1
	3023292	Wiring harness	1
	S-691	Washer, plain	1
	3000283	Bracket, terminal	1
		ENGINE HEATERS (WATER)	
	212023	Kim Hotstart (115 volts, 2500 watts)	A/R
	212024	Kim Hotstart (230 volts, 2500 watts)	A/R
	212025	Kim Hotstart (460 volts, 2500 watts)	A/R
	212026	Kim Hotstart (230 volts, 4000 watts)	A/R
	212027	Kim Hotstart (460 volts, 4000 watts)	A/R
	212028	Kim Hotstart (230 volts, 3 phase 3750 watts)	A/R
	217243	Kim Hotstart assembly (460 volts, 2500 watts)	A/R
	212017	Relay	
	212025	Kim Hotstart	
	217244	Kim Hotstart Assembly (460 volts, 4000 watts)	A/R
	212027	Kim Hotstart	
	212017	Relay	
	217245	Kim Hotstart Assembly (230 volts, 3 Phase, 3750 watts)	A/R
	212028	Kim Hotstart	
	212016	Relay	

REF. NO.	PART NUMBER	PART NAME	NO. REQ'D.
		(LUBRICATING OIL)	
	167619	Oil heater (115 volts, 300 watts)	A/R
	167621	Oil heater (230 volts, 300 watts)	A/R
	3000214	Oil heater (460 volts, 300 watts)	A/R

PARTS INDENTED ARE INCLUDED IN THE PART UNDER WHICH THEY ARE INDENTED

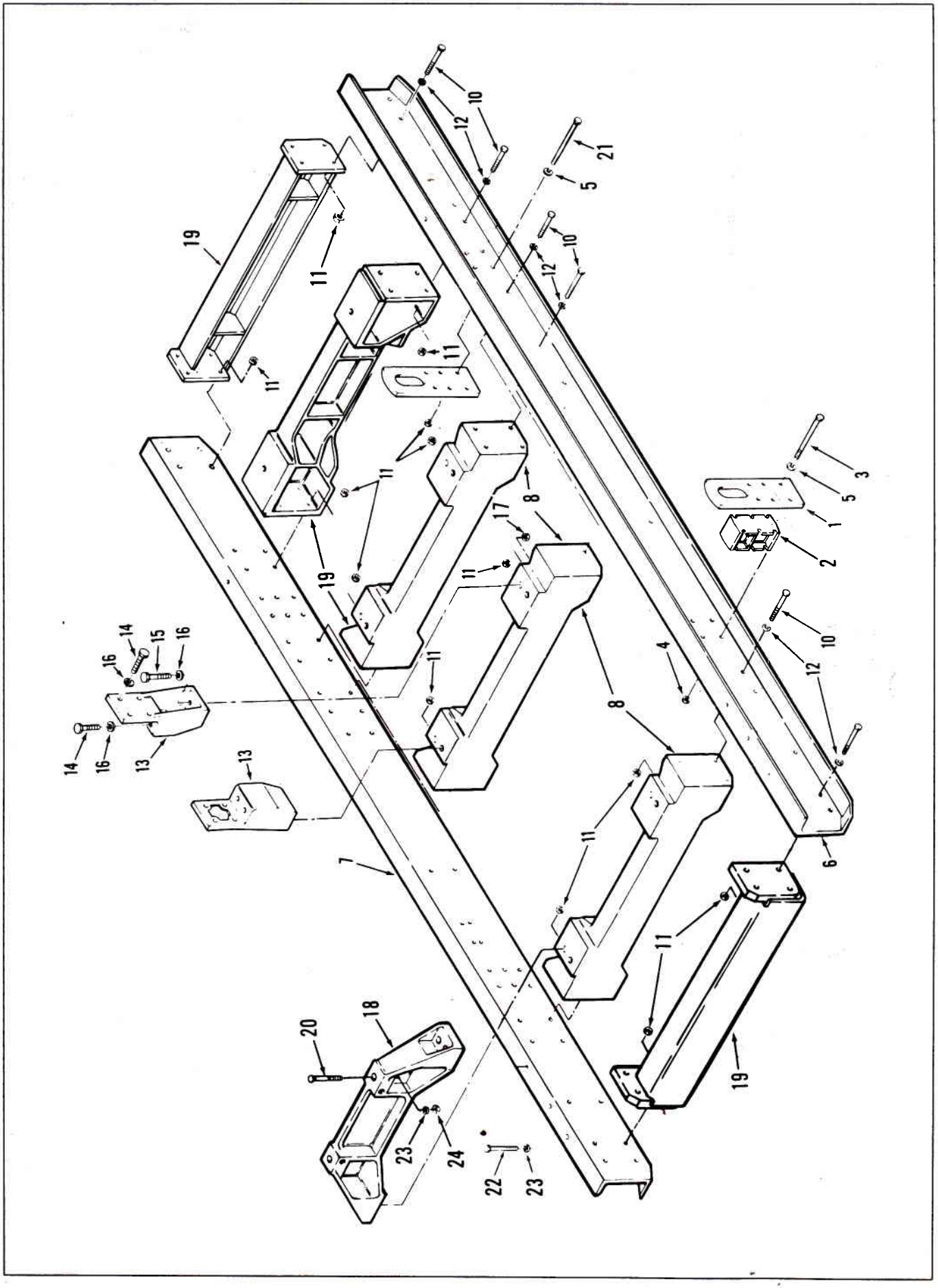
1
2
3
4
5
6
7
8
10
11
12
13
14
15
16
17
18
19
20
21
22
23
24

REF. NO.	PART NUMBER	PART NAME	NO. REQ'D.	REF. NO.	PART NUMBER	PART NAME	NO. REQ'D.
		BASE RAILS ENGINE MOUNTING with SERIES 680-2 Generator Frame					
1	3002270	Bracket, lifting	4				
2	3012447	Spacer, lifting bracket	2				
3	S-173	Capscrew (5/8" x 11 x 6")	12				
4	S-201	Nut	12				
5	S-603	Washer	12				
6	3019859	Rail, base (L.B.)	1				
7	3019860	Rail, base (R.B.)	1				
8	218537	Crossmember, sub-base	2				
9	218543	Crossmember, sub-base	2				
19	3012505	Crossmember, sub-base	2				
		MOUNTING FOR CROSS-MEMBER'S TO BASE RAILS					
10	S-103-A	Capscrew (5/8" x 11 x 2")	48				
11	S-201	Nut	48				
12	S-603	Washer	48				
		SUPPORT					
13	3003440	Support, rear engine	2				
		MOUNTING PARTS					
14	S-123	Capscrew (3/4" x 10 x2-1/2")	8				
15	S-179	Capscrew (3/4" x 10 x 3-1/2")	4				
16	S-611	Lockwasher	12				
17	S-204	Nut	4				
		ADAPTER, FRONT ENGINE SUPPORT					
18	3003460	Adapter, support	1				
		MOUNTING PARTS					
20	S-147-A	Capscrew (3/4" x 10 x 4-1/2")	2				
22	S-179	Capscrew (3/4" x 10 x 3-1/2")	4				
23	S-611	Lockwasher	6				
24	S-204	Nut	6				
		MOUNTING PARTS FOR REAR LIFTING BRACKETS					
21	S-103-A	Capscrew (5/8" x 11 x 2)	12				
5	S-603	Lockwasher	12				
4	S-201	Nut	12				

PARTS INDENTED ARE INCLUDED IN THE PART UNDER WHICH THEY ARE INDENTED

3014198

GEBR. PAPROTTKA GMBH
HAMBURG

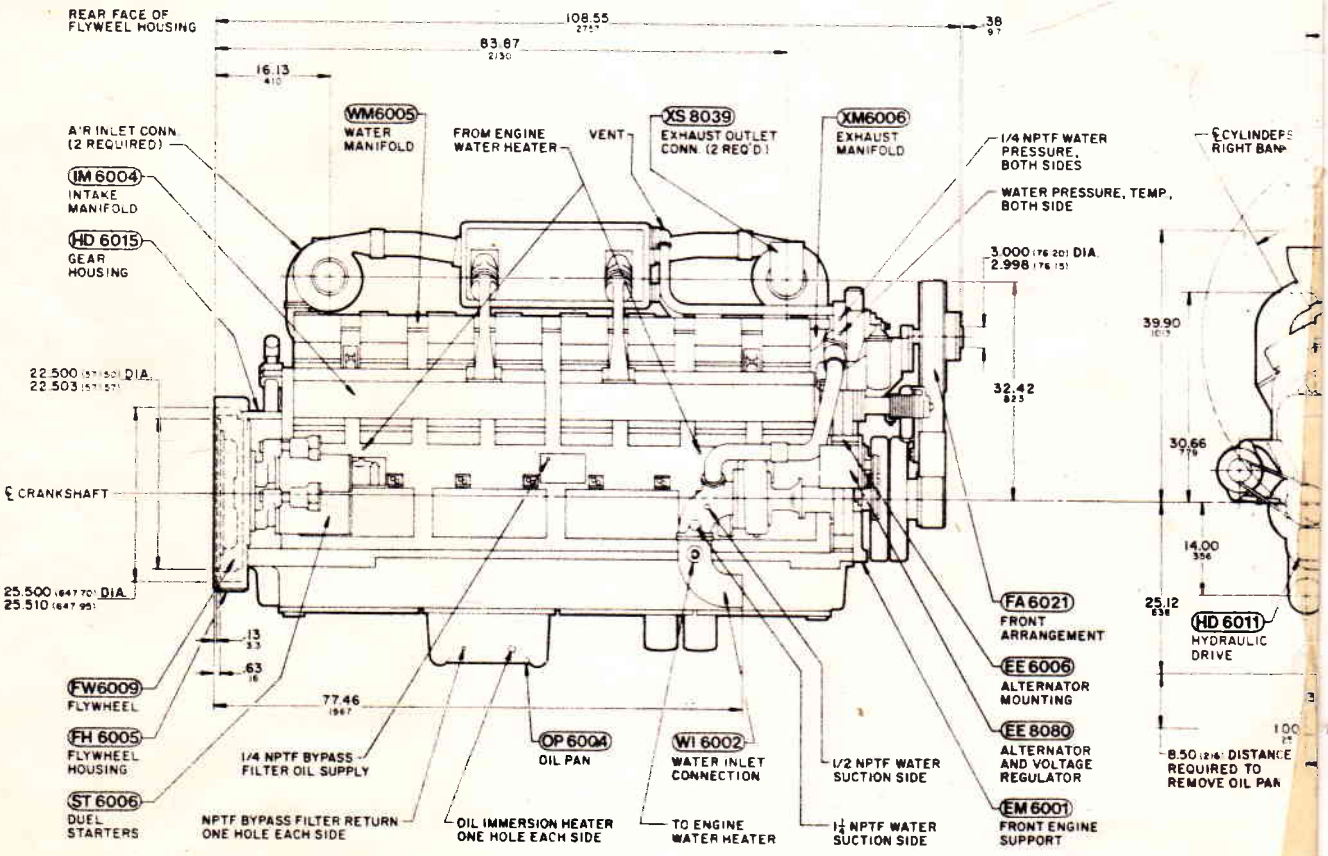

REV.	DESCRIPTION	BY	DATE	CHK	DATE

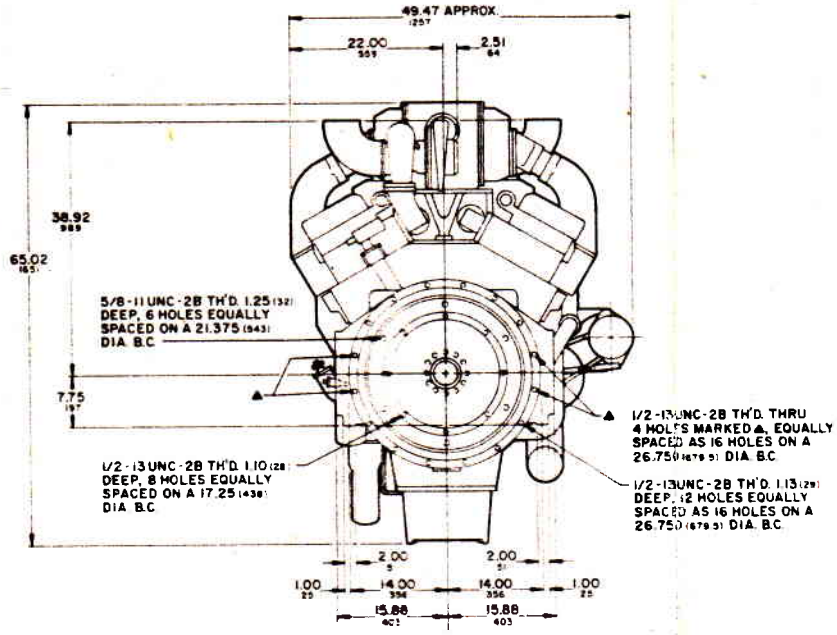

ENGINE SERVICE CONNECTIONS

FUEL INLET CONNECTION 1 3/16-12 UNF-2A TH'D. WITH 37° TIP

FUEL RETURN TO TANK 7/8-14 UNF-2A TH'D. WITH 37° TIP

OIL DRAIN: 1-18 NS-3B TH'D. (2-REQ'D.)

CYLINDER BLOCK DRAIN (2-REQ'D. EACH SIDE)

TACHOMETER TAKE OFF 7/8-18 NS TH'D. WITH .187 (4.75) DRIVE TIP 1/2 ENGINE SPEED, CLOCKWISE ROTATION

WATER INLET CONNECTION 5.00 (127) O.D.

WATER OUTLET CONNECTION 3.00 (76) O.D. (2-REQ'D.)

AIR INLET CONNECTION 5.50 (139) O.D. (2-REQ'D.)

EXHAUST OUTLET CONNECTION 5.00 (127) O.D. (2-REQ'D.)

LUBE OIL PRESSURE GAUGE 1/8 NPTF

LUBE OIL TEMPERATURE GAUGE 1/4 NPTF

WATER TEMPERATURE GAUGE 1/2 NPTF

SAFETY CONTROLS:
LOW LUBE OIL PRESSURE: 1/8 NPTF
HIGH WATER TEMPERATURE: 1/2 NPTF
LOW WATER TEMPERATURE: 1/2 NPTF

OIL IMMERSION HEATER 1" NPTF

ENGINE WATER HEATER (2-REQ'D.)
TO ENGINE 1" NPTF
TO HEATER 1 1/4 NPTF

BY PASS FILTER 1/4 NPTF

VENT LINE CONNECTION #6 (2-REQ'D.)

WATER MAKEUP LINE 1/2 I.D.

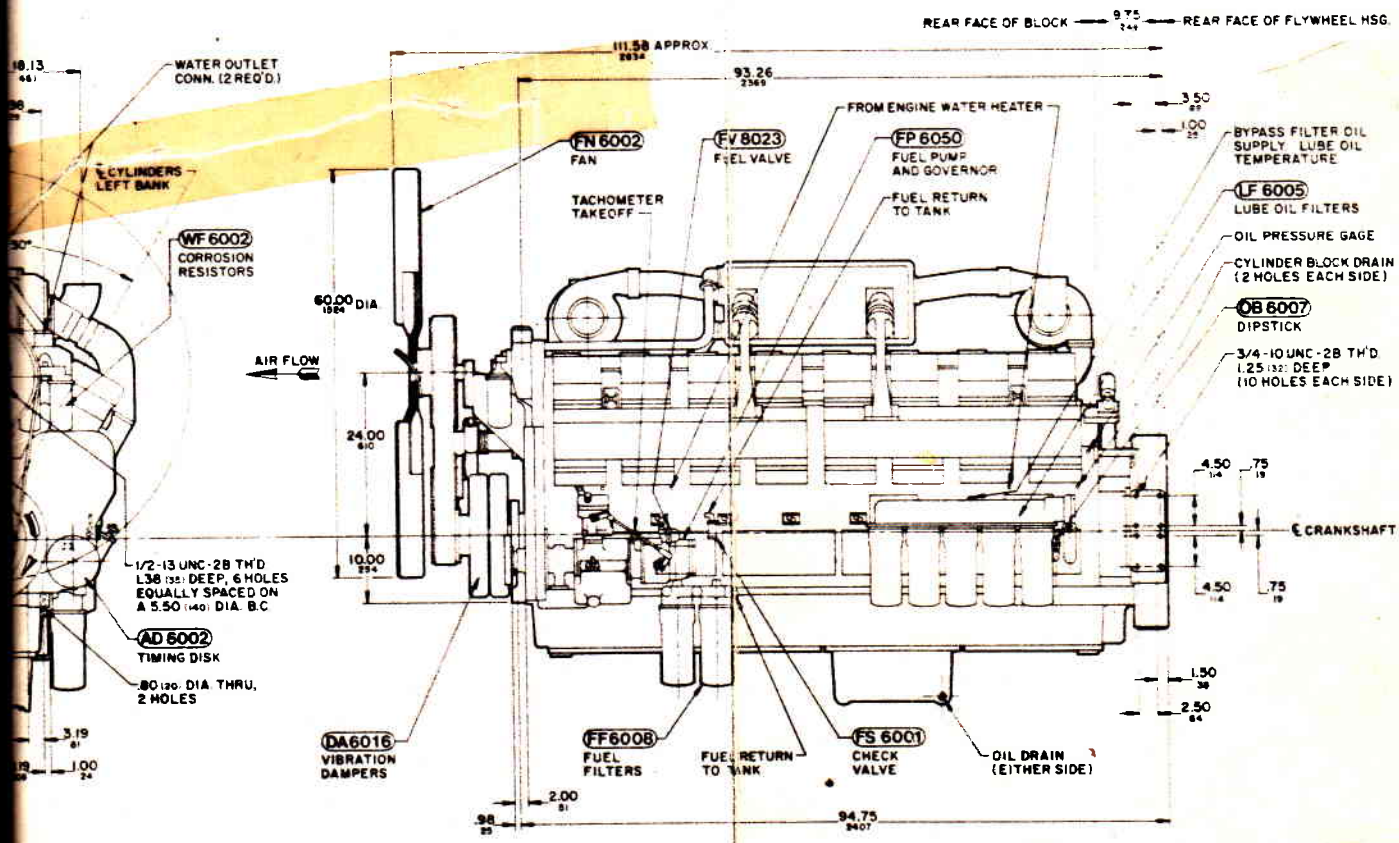

3014198

NOTE: ALL DIMENSIONS ARE IN INCHES AND MILLIMETERS

DO NOT SCALE THIS DRAWING

FAN TO FLYWHEEL

Cummins

KTA-3067-G

INSTALLATION DIAGRAM

J 3014198

Cummins Engine Company, Inc.
Columbus, Indiana, U.S.A. 47201
Cable: CUMDIEX COLUMBUS

Registered Office:
Cummins Engine Company, Ltd.
Coombe House, St. George's Square
New Malden, England
Cable: INTCUMLON MALDEN
Registration No. 573951 England

©Copyright
Cummins Engine Company, Inc. 1980

Bulletin No. 3379592-00 Printed in U.S.A. 1/81